© Innomotics 2023

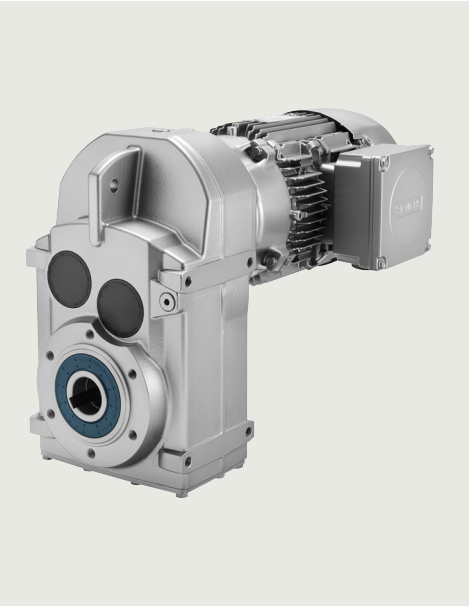

4/2 **Orientation**

4/3 **Geared motors up to 55 kW**
4/3 Selection and ordering data

4/46 **Transmission ratios and torques**
4/46 Selection and ordering data

4/57 **Transmission ratios and torques for very low speeds**
4/57 Selection and ordering data

4/68 **Dimensional drawings**
4/68 Overview
4/70 Parallel shaft geared motors FZ./FD.29
4/74 Parallel shaft geared motors FZ./FD.39
4/78 Parallel shaft geared motors FZ./FD.49
4/82 Parallel shaft geared motors FZ./FD.69
4/86 Parallel shaft geared motors FZ./FD.79
4/90 Parallel shaft geared motors FZ./FD.89
4/95 Parallel shaft geared motors FZ./FD.109
4/100 Parallel shaft geared motors FZ./FD.129
4/105 Parallel shaft geared motors FZ./FD.149
4/110 Parallel shaft geared motors FZ./FD.169
4/115 Parallel shaft geared motors FZ./FD.189
4/119 Parallel shaft tandem geared motors
4/121 SIMOLOC assembly system
Protective covers
4/122 Protective covers for hollow shaft
4/122 Protective covers for hollow shaft with shrink disk
4/123 Protective covers for hollow shaft with SIMOLOC assembly system
4/124 Inner contour of the flange-mounted design

© Innomotics 2023

Orientation

Parallel shaft geared motors 2- or 3-stages
Parallel shaft tandem geared motors 4 to 6-stage for especially low output speeds

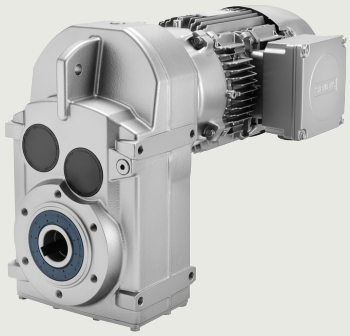

Fig. 4/1 Parallel shaft geared motor FZ/FD

Designs	Mounting	Frame sizes	Maximum output torque T_{2N} Nm	Transmission ratio i –	Maximum motor power [1] P_1 kW	Supported motors
• Shaft-mounted design • Flange-mounted design with or without VLplus reinforced bearing systems • Design with integrated housing flange • Foot-mounted design • Tandem geared motors	• Hollow shaft design with feather key • Hollow shaft design with splined shaft • Hollow shaft design with shrink disk • Hollow shaft design with SIMOLOC assembly system • Solid shaft design with and without feather key	FZ29 … FZ189 FD29 … FD189	150 … 19000	3.5 … 70.74 32 … 413	55	• Converter World Motor • Induction motors • Synchronous reluctance motors • VSD10 line motors • Explosion-protected motors
		FZ29-Z19 … FD189-D69		274 … 29900	7.5	

[1] With 4-pole motor up to 55 kW for a 50 Hz line frequency in integral type of construction. An adapter must be mounted for a motor power > 55 kW.

© Innomotics 2023

Selection and ordering data

P_N kW	n_2 rpm	T_2 Nm	i –	F_{R2} N	f_B –	m kg	Article No. (Article No. supplement, see below)	Additional identification code **-Z** with order code No. of poles
0.09	**FD.69-LE63MEB6**							
	2.6	335	348.40	11400	1.8	30	**2KJ3404- ■ BD21- ■ ■ S1 -Z**	**P01**
	2.9	295	309.78	11500	2	30	**2KJ3404- ■ BD21- ■ ■ R1 -Z**	**P01**
	FD.49-LE63MEB6							
	2.7	315	330.98	8510	1.5	25	**2KJ3403- ■ BD21- ■ ■ S1 -Z**	**P01**
	3	280	294.29	8610	1.7	25	**2KJ3403- ■ BD21- ■ ■ R1 -Z**	**P01**
	3.5	245	258.40	8720	1.9	25	**2KJ3403- ■ BD21- ■ ■ Q1 -Z**	**P01**
	FD.39-LE63MEB6							
	3.3	260	274.26	5930	1.1	16	**2KJ3402- ■ BD21- ■ ■ R1 -Z**	**P01**
	3.7	230	243.26	6040	1.2	16	**2KJ3402- ■ BD21- ■ ■ Q1 -Z**	**P01**
	4.2	200	211.06	6150	1.4	16	**2KJ3402- ■ BD21- ■ ■ P1 -Z**	**P01**
	4.7	184	191.87	6210	1.6	16	**2KJ3402- ■ BD21- ■ ■ N1 -Z**	**P01**
	FD.39-LE63MCA4							
	5.1	167	274.26	6270	1.7	15	**2KJ3402- ■ BB21- ■ ■ R1 -Z**	–
	5.8	148	243.26	6340	2	15	**2KJ3402- ■ BB21- ■ ■ Q1 -Z**	–
	FD.29-LE63MCA4							
	4.7	182	298.58	5220	0.82	9	**2KJ3401- ■ BB21- ■ ■ Q1 -Z**	–
	5.3	161	264.39	5220	0.93	9	**2KJ3401- ■ BB21- ■ ■ P1 -Z**	–
	6.1	140	229.72	5220	1.1	9	**2KJ3401- ■ BB21- ■ ■ N1 -Z**	–
	6.8	127	208.83	5220	1.2	9	**2KJ3401- ■ BB21- ■ ■ M1 -Z**	–
	7.9	108	177.71	5220	1.4	9	**2KJ3401- ■ BB21- ■ ■ L1 -Z**	–
	8.7	98	161.55	5220	1.5	9	**2KJ3401- ■ BB21- ■ ■ K1 -Z**	–
	10	86	140.86	5220	1.7	9	**2KJ3401- ■ BB21- ■ ■ J1 -Z**	–
	11	77	126.09	5220	2	9	**2KJ3401- ■ BB21- ■ ■ H1 -Z**	–
	13	68	111.97	5220	2.2	9	**2KJ3401- ■ BB21- ■ ■ G1 -Z**	–
	14	63	103.36	5220	2.4	9	**2KJ3401- ■ BB21- ■ ■ F1 -Z**	–
	16	55	89.78	5220	2.7	9	**2KJ3401- ■ BB21- ■ ■ E1 -Z**	–
	18	48	78.02	5220	3.2	9	**2KJ3401- ■ BB21- ■ ■ D1 -Z**	–
	20	43	70.43	5220	3.5	9	**2KJ3401- ■ BB21- ■ ■ C1 -Z**	–
	21	40	66.29	5220	3.7	9	**2KJ3401- ■ BB21- ■ ■ B1 -Z**	–
	24	35	57.79	5220	4.3	9	**2KJ3401- ■ BB21- ■ ■ A1 -Z**	–
	FZ.29-LE63MCA4							
	25	35	56.73	5220	4.3	9	**2KJ3301- ■ BB21- ■ ■ C2 -Z**	–
	28	31	50.32	5220	4.9	9	**2KJ3301- ■ BB21- ■ ■ B2 -Z**	–
	32	27	43.66	5220	5.6	9	**2KJ3301- ■ BB21- ■ ■ A2 -Z**	–
	36	24	39.69	5220	6.2	9	**2KJ3301- ■ BB21- ■ ■ X1 -Z**	–
	41	21	34.04	5220	7.2	9	**2KJ3301- ■ BB21- ■ ■ W1 -Z**	–
	46	19	30.95	5220	8	9	**2KJ3301- ■ BB21- ■ ■ V1 -Z**	–
	52	16	27.13	5220	9.1	9	**2KJ3301- ■ BB21- ■ ■ U1 -Z**	–
	58	15	24.22	5220	10	9	**2KJ3301- ■ BB21- ■ ■ T1 -Z**	–
	65	13	21.58	5220	11	9	**2KJ3301- ■ BB21- ■ ■ S1 -Z**	–
	71	12	19.92	5110	12	9	**2KJ3301- ■ BB21- ■ ■ R1 -Z**	–
	81	11	17.44	4890	14	9	**2KJ3301- ■ BB21- ■ ■ Q1 -Z**	–
	92	9.3	15.29	4690	16	9	**2KJ3301- ■ BB21- ■ ■ P1 -Z**	–
	102	8.5	13.88	4540	18	9	**2KJ3301- ■ BB21- ■ ■ N1 -Z**	–
	108	8	13.06	4460	19	9	**2KJ3301- ■ BB21- ■ ■ M1 -Z**	–
	123	7	11.51	4280	20	9	**2KJ3301- ■ BB21- ■ ■ L1 -Z**	–
	141	6.1	9.99	4080	22	9	**2KJ3301- ■ BB21- ■ ■ K1 -Z**	–
	146	5.9	9.69	4040	24	9	**2KJ3301- ■ BB21- ■ ■ J1 -Z**	–
	163	5.3	8.63	3890	25	9	**2KJ3301- ■ BB21- ■ ■ H1 -Z**	–
	177	4.9	7.97	3790	25	9	**2KJ3301- ■ BB21- ■ ■ G1 -Z**	–

Article No. supplement		
Shaft design	**1 or 9**	see page 10/49
Frequency and voltage	**2 or 9**	see page 11/2
Gearbox mounting type	**A, F, H or D**	see page 10/42

© Innomotics 2023

Selection and ordering data

P_N kW	n_2 rpm	T_2 Nm	i –	F_{R2} N	f_B –	m kg	Article No. (Article No. supplement, see below)	Additional identification code **-Z** with order code No. of poles
0.12	**FD.49-LE63ZMH4P**							
	4.2	270	330.98	8640	1.8	26	**2KJ3403- ■ BD23- ■ ■ S1 -Z**	–
	4.7	240	294.29	8730	2	26	**2KJ3403- ■ BD23- ■ ■ R1 -Z**	–
	FD.39-LE63ZMH4P							
	5.1	225	274.26	6060	1.3	17	**2KJ3402- ■ BD23- ■ ■ R1 -Z**	–
	5.7	200	243.26	6150	1.4	17	**2KJ3402- ■ BD23- ■ ■ Q1 -Z**	–
	6.6	174	211.06	6250	1.7	17	**2KJ3402- ■ BD23- ■ ■ P1 -Z**	–
	7.2	158	191.87	6310	1.8	17	**2KJ3402- ■ BD23- ■ ■ N1 -Z**	–
	8.4	136	164.56	6390	2.1	17	**2KJ3402- ■ BD23- ■ ■ M1 -Z**	–
	FD.29-LE63ZMH4P							
	6.7	172	208.83	5220	0.87	11	**2KJ3401- ■ BD23- ■ ■ M1 -Z**	–
	7.8	147	177.71	5220	1	11	**2KJ3401- ■ BD23- ■ ■ L1 -Z**	–
	8.6	133	161.55	5220	1.1	11	**2KJ3401- ■ BD23- ■ ■ K1 -Z**	–
	9.9	116	140.86	5220	1.3	11	**2KJ3401- ■ BD23- ■ ■ J1 -Z**	–
	11	104	126.09	5220	1.4	11	**2KJ3401- ■ BD23- ■ ■ H1 -Z**	–
	12	92	111.97	5220	1.6	11	**2KJ3401- ■ BD23- ■ ■ G1 -Z**	–
	13	85	103.36	5220	1.8	11	**2KJ3401- ■ BD23- ■ ■ F1 -Z**	–
	15	74	89.78	5220	2	11	**2KJ3401- ■ BD23- ■ ■ E1 -Z**	–
	18	64	78.02	5220	2.3	11	**2KJ3401- ■ BD23- ■ ■ D1 -Z**	–
	20	58	70.43	5220	2.6	11	**2KJ3401- ■ BD23- ■ ■ C1 -Z**	–
	21	55	66.29	5220	2.7	11	**2KJ3401- ■ BD23- ■ ■ B1 -Z**	–
	24	48	57.79	5220	3.1	11	**2KJ3401- ■ BD23- ■ ■ A1 -Z**	–
	FZ.29-LE63ZMH4P							
	25	47	56.73	5220	3.2	11	**2KJ3301- ■ BD23- ■ ■ C2 -Z**	–
	28	42	50.32	5220	3.6	11	**2KJ3301- ■ BD23- ■ ■ B2 -Z**	–
	32	36	43.66	5220	4.2	11	**2KJ3301- ■ BD23- ■ ■ A2 -Z**	–
	35	33	39.69	5220	4.6	11	**2KJ3301- ■ BD23- ■ ■ X1 -Z**	–
	41	28	34.04	5220	5.3	11	**2KJ3301- ■ BD23- ■ ■ W1 -Z**	–
	45	26	30.95	5220	5.9	11	**2KJ3301- ■ BD23- ■ ■ V1 -Z**	–
	51	22	27.13	5220	6.7	11	**2KJ3301- ■ BD23- ■ ■ U1 -Z**	–
	57	20	24.22	5220	7.5	11	**2KJ3301- ■ BD23- ■ ■ T1 -Z**	–
	64	18	21.58	5220	8.4	11	**2KJ3301- ■ BD23- ■ ■ S1 -Z**	–
	70	16	19.92	5100	9.1	11	**2KJ3301- ■ BD23- ■ ■ R1 -Z**	–
	80	14	17.44	4890	10	11	**2KJ3301- ■ BD23- ■ ■ Q1 -Z**	–
	91	13	15.29	4680	12	11	**2KJ3301- ■ BD23- ■ ■ P1 -Z**	–
	100	11	13.88	4550	13	11	**2KJ3301- ■ BD23- ■ ■ N1 -Z**	–
	106	11	13.06	4450	14	11	**2KJ3301- ■ BD23- ■ ■ M1 -Z**	–
	121	9.5	11.51	4280	15	11	**2KJ3301- ■ BD23- ■ ■ L1 -Z**	–
	139	8.2	9.99	4090	16	11	**2KJ3301- ■ BD23- ■ ■ K1 -Z**	–
	143	8	9.69	4040	18	11	**2KJ3301- ■ BD23- ■ ■ J1 -Z**	–
	161	7.1	8.63	3890	18	11	**2KJ3301- ■ BD23- ■ ■ H1 -Z**	–
	174	6.6	7.97	3790	18	11	**2KJ3301- ■ BD23- ■ ■ G1 -Z**	–
	199	5.8	6.98	3630	21	11	**2KJ3301- ■ BD23- ■ ■ F1 -Z**	–
	227	5	6.12	3480	23	11	**2KJ3301- ■ BD23- ■ ■ E1 -Z**	–
	250	4.6	5.55	3370	24	11	**2KJ3301- ■ BD23- ■ ■ D1 -Z**	–
	266	4.3	5.22	3300	25	11	**2KJ3301- ■ BD23- ■ ■ C1 -Z**	–
0.18	**FD.79-LE71ZMK6P**							
	2.5	700	357.00	14200	1.4	39	**2KJ3405- ■ CC23- ■ ■ S1 -Z**	**P01**
	2.7	635	324.62	14300	1.6	39	**2KJ3405- ■ CC23- ■ ■ R1 -Z**	**P01**
	3.2	540	276.09	14500	1.8	39	**2KJ3405- ■ CC23- ■ ■ Q1 -Z**	**P01**
	3.5	490	250.99	14500	2	39	**2KJ3405- ■ CC23- ■ ■ P1 -Z**	**P01**

Article No. supplement		
Shaft design	**1 or 9**	see page 10/49
Frequency and voltage	**2 or 9**	see page 11/2
Gearbox mounting type	**A, F, H or D**	see page 10/42

© Innomotics 2023

Selection and ordering data

P_N kW	n_2 rpm	T_2 Nm	i –	F_{R2} N	f_B –	m kg	Article No. (Article No. supplement, see below)	Additional identification code **-Z** with order code No. of poles
0.18	**FD.69-LE71ZMK6P**							
	2.5	680	348.40	10600	0.88	32	**2KJ3404- ■ CC23- ■ ■ S1 -Z**	**P01**
	2.8	605	309.78	10800	0.99	32	**2KJ3404- ■ CC23- ■ ■ R1 -Z**	**P01**
	3.2	530	272.00	11000	1.1	32	**2KJ3404- ■ CC23- ■ ■ Q1 -Z**	**P01**
	3.5	485	247.27	11100	1.2	32	**2KJ3404- ■ CC23- ■ ■ P1 -Z**	**P01**
	FD.69-LE63ZMK4P							
	4	430	348.40	11200	1.4	31	**2KJ3404- ■ BE23- ■ ■ S1 -Z**	–
	4.5	380	309.78	11300	1.6	31	**2KJ3404- ■ BE23- ■ ■ R1 -Z**	–
	5.1	335	272.00	11400	1.8	31	**2KJ3404- ■ BE23- ■ ■ Q1 -Z**	–
	5.6	305	247.27	11500	2	31	**2KJ3404- ■ BE23- ■ ■ P1 -Z**	–
	FD.49-LE71ZMK6P							
	3	575	294.29	7340	0.83	27	**2KJ3403- ■ CC23- ■ ■ R1 -Z**	**P01**
	3.4	505	258.40	7790	0.95	27	**2KJ3403- ■ CC23- ■ ■ Q1 -Z**	**P01**
	3.7	460	234.91	8090	1	27	**2KJ3403- ■ CC23- ■ ■ P1 -Z**	**P01**
	FD.49-LE63ZMK4P							
	4.2	410	330.98	8240	1.2	26	**2KJ3403- ■ BE23- ■ ■ S1 -Z**	–
	4.7	365	294.29	8370	1.3	26	**2KJ3403- ■ BE23- ■ ■ R1 -Z**	–
	5.4	320	258.40	8500	1.5	26	**2KJ3403- ■ BE23- ■ ■ Q1 -Z**	–
	5.9	290	234.91	8590	1.6	26	**2KJ3403- ■ BE23- ■ ■ P1 -Z**	–
	6.9	245	200.98	8720	1.9	26	**2KJ3403- ■ BE23- ■ ■ N1 -Z**	–
	7.6	225	182.71	8770	2.1	26	**2KJ3403- ■ BE23- ■ ■ M1 -Z**	–
	FD.39-LE63ZMK4P							
	5	340	274.26	5630	0.85	17	**2KJ3402- ■ BE23- ■ ■ R1 -Z**	–
	5.7	300	243.26	5780	0.96	17	**2KJ3402- ■ BE23- ■ ■ Q1 -Z**	–
	6.6	260	211.06	5930	1.1	17	**2KJ3402- ■ BE23- ■ ■ P1 -Z**	–
	7.2	235	191.87	6020	1.2	17	**2KJ3402- ■ BE23- ■ ■ N1 -Z**	–
	8.4	200	164.56	6150	1.4	17	**2KJ3402- ■ BE23- ■ ■ M1 -Z**	–
	9.3	186	149.60	6200	1.6	17	**2KJ3402- ■ BE23- ■ ■ L1 -Z**	–
	11	163	131.17	6290	1.8	17	**2KJ3402- ■ BE23- ■ ■ K1 -Z**	–
	12	145	117.08	6360	2	17	**2KJ3402- ■ BE23- ■ ■ J1 -Z**	–
	13	130	104.34	6410	2.2	17	**2KJ3402- ■ BE23- ■ ■ H1 -Z**	–
	FD.29-LE63ZMK4P							
	9.8	175	140.86	5220	0.86	11	**2KJ3401- ■ BE23- ■ ■ J1 -Z**	–
	11	156	126.09	5220	0.96	11	**2KJ3401- ■ BE23- ■ ■ H1 -Z**	–
	12	139	111.97	5220	1.1	11	**2KJ3401- ■ BE23- ■ ■ G1 -Z**	–
	13	128	103.36	5220	1.2	11	**2KJ3401- ■ BE23- ■ ■ F1 -Z**	–
	15	111	89.78	5220	1.3	11	**2KJ3401- ■ BE23- ■ ■ E1 -Z**	–
	18	97	78.02	5220	1.5	11	**2KJ3401- ■ BE23- ■ ■ D1 -Z**	–
	20	87	70.43	5220	1.7	11	**2KJ3401- ■ BE23- ■ ■ C1 -Z**	–
	21	82	66.29	5220	1.8	11	**2KJ3401- ■ BE23- ■ ■ B1 -Z**	–
	24	72	57.79	5220	2.1	11	**2KJ3401- ■ BE23- ■ ■ A1 -Z**	–
	FZ.29-LE63ZMK4P							
	24	70	56.73	5220	2.1	11	**2KJ3301- ■ BE23- ■ ■ C2 -Z**	–
	28	62	50.32	5220	2.4	11	**2KJ3301- ■ BE23- ■ ■ B2 -Z**	–
	32	54	43.66	5220	2.8	11	**2KJ3301- ■ BE23- ■ ■ A2 -Z**	–
	35	49	39.69	5220	3	11	**2KJ3301- ■ BE23- ■ ■ X1 -Z**	–
	41	42	34.04	5220	3.6	11	**2KJ3301- ■ BE23- ■ ■ W1 -Z**	–
	45	38	30.95	5220	3.9	11	**2KJ3301- ■ BE23- ■ ■ V1 -Z**	–
	51	34	27.13	5220	4.5	11	**2KJ3301- ■ BE23- ■ ■ U1 -Z**	–
	57	30	24.22	5220	5	11	**2KJ3301- ■ BE23- ■ ■ T1 -Z**	–
	64	27	21.58	5160	5.6	11	**2KJ3301- ■ BE23- ■ ■ S1 -Z**	–
	70	25	19.92	5030	6.1	11	**2KJ3301- ■ BE23- ■ ■ R1 -Z**	–

Article No. supplement		
Shaft design	**1 or 9**	see page 10/49
Frequency and voltage	**2 or 9**	see page 11/2
Gearbox mounting type	**A, F, H or D**	see page 10/42

© Innomotics 2023

Selection and ordering data

P_N kW	n_2 rpm	T_2 Nm	i –	F_{R2} N	f_B –	m kg	Article No. (Article No. supplement, see below)	Additional identification code **-Z** with order code No. of poles
0.18	**FZ.29-LE63ZMK4P**							
	79	22	17.44	4830	6.9	11	**2KJ3301- ■ BE23- ■ ■ Q1 -Z**	–
	91	19	15.29	4640	7.9	11	**2KJ3301- ■ BE23- ■ ■ P1 -Z**	–
	100	17	13.88	4500	8.7	11	**2KJ3301- ■ BE23- ■ ■ N1 -Z**	–
	106	16	13.06	4420	9.3	11	**2KJ3301- ■ BE23- ■ ■ M1 -Z**	–
	120	14	11.51	4250	10	11	**2KJ3301- ■ BE23- ■ ■ L1 -Z**	–
	139	12	9.99	4060	11	11	**2KJ3301- ■ BE23- ■ ■ K1 -Z**	–
	143	12	9.69	4000	12	11	**2KJ3301- ■ BE23- ■ ■ J1 -Z**	–
	160	11	8.63	3860	12	11	**2KJ3301- ■ BE23- ■ ■ H1 -Z**	–
	174	9.9	7.97	3760	12	11	**2KJ3301- ■ BE23- ■ ■ G1 -Z**	–
	198	8.7	6.98	3610	14	11	**2KJ3301- ■ BE23- ■ ■ F1 -Z**	–
	226	7.6	6.12	3460	15	11	**2KJ3301- ■ BE23- ■ ■ E1 -Z**	–
	250	6.9	5.55	3350	16	11	**2KJ3301- ■ BE23- ■ ■ D1 -Z**	–
	265	6.5	5.22	3290	16	11	**2KJ3301- ■ BE23- ■ ■ C1 -Z**	–
	301	5.7	4.60	3160	17	11	**2KJ3301- ■ BE23- ■ ■ B1 -Z**	–
	346	5	4.00	3020	18	11	**2KJ3301- ■ BE23- ■ ■ A1 -Z**	–
	FZ.29-LE63MEB2P							
	163	10	17.44	3860	14	9	**2KJ3301- ■ BC23- ■ ■ Q1 -Z**	**P00**
	186	9.2	15.29	3690	16	9	**2KJ3301- ■ BC23- ■ ■ P1 -Z**	**P00**
	205	8.4	13.88	3580	18	9	**2KJ3301- ■ BC23- ■ ■ N1 -Z**	**P00**
	218	7.9	13.06	3510	19	9	**2KJ3301- ■ BC23- ■ ■ M1 -Z**	**P00**
	248	6.9	11.51	3370	21	9	**2KJ3301- ■ BC23- ■ ■ L1 -Z**	**P00**
	285	6	9.99	3220	23	9	**2KJ3301- ■ BC23- ■ ■ K1 -Z**	**P00**
	294	5.8	9.69	3180	24	9	**2KJ3301- ■ BC23- ■ ■ J1 -Z**	**P00**
	330	5.2	8.63	3060	25	9	**2KJ3301- ■ BC23- ■ ■ H1 -Z**	**P00**
	358	4.8	7.97	2990	25	9	**2KJ3301- ■ BC23- ■ ■ G1 -Z**	**P00**
0.25	**FD.79-LE71YMS6P**							
	2.4	980	357.00	13600	1	40	**2KJ3405- ■ CE23- ■ ■ S1 -Z**	**P01**
	2.7	890	324.62	13800	1.1	40	**2KJ3405- ■ CE23- ■ ■ R1 -Z**	**P01**
	3.2	755	276.09	14100	1.3	40	**2KJ3405- ■ CE23- ■ ■ Q1 -Z**	**P01**
	3.5	685	250.99	14200	1.5	40	**2KJ3405- ■ CE23- ■ ■ P1 -Z**	**P01**
	FD.79-LE71ZMK4P							
	3.9	610	357.00	14300	1.6	39	**2KJ3405- ■ CC23- ■ ■ S1 -Z**	–
	4.3	555	324.62	14500	1.8	39	**2KJ3405- ■ CC23- ■ ■ R1 -Z**	–
	5.1	470	276.09	14500	2.1	39	**2KJ3405- ■ CC23- ■ ■ Q1 -Z**	–
	FD.69-LE71YMS6P							
	3.2	745	272.00	10500	0.8	33	**2KJ3404- ■ CE23- ■ ■ Q1 -Z**	**P01**
	3.5	675	247.27	10600	0.88	33	**2KJ3404- ■ CE23- ■ ■ P1 -Z**	**P01**
	FD.69-LE71ZMK4P							
	4	595	348.40	10800	1	32	**2KJ3404- ■ CC23- ■ ■ S1 -Z**	–
	4.5	530	309.78	11000	1.1	32	**2KJ3404- ■ CC23- ■ ■ R1 -Z**	–
	5.1	465	272.00	11100	1.3	32	**2KJ3404- ■ CC23- ■ ■ Q1 -Z**	–
	5.6	420	247.27	11200	1.4	32	**2KJ3404- ■ CC23- ■ ■ P1 -Z**	–
	6.6	360	211.56	11400	1.7	32	**2KJ3404- ■ CC23- ■ ■ N1 -Z**	–
	7.3	325	192.32	11500	1.8	32	**2KJ3404- ■ CC23- ■ ■ M1 -Z**	–
	8.2	290	170.00	11500	2.1	32	**2KJ3404- ■ CC23- ■ ■ L1 -Z**	–
	FD.49-LE71ZMK4P							
	4.2	565	330.98	7400	0.85	27	**2KJ3403- ■ CC23- ■ ■ S1 -Z**	–
	4.7	500	294.29	7820	0.95	27	**2KJ3403- ■ CC23- ■ ■ R1 -Z**	–
	5.4	440	258.40	8150	1.1	27	**2KJ3403- ■ CC23- ■ ■ Q1 -Z**	–
	5.9	400	234.91	8270	1.2	27	**2KJ3403- ■ CC23- ■ ■ P1 -Z**	–
	6.9	340	200.98	8440	1.4	27	**2KJ3403- ■ CC23- ■ ■ N1 -Z**	–

Article No. supplement		
Shaft design	**1 or 9**	see page 10/49
Frequency and voltage	**2 or 9**	see page 11/2
Gearbox mounting type	**A, F, H or D**	see page 10/42

© Innomotics 2023

Selection and ordering data

P_N kW	n_2 rpm	T_2 Nm	i –	F_{R2} N	f_B –	m kg	Article No. (Article No. supplement, see below)	Additional identification code **-Z** with order code No. of poles
0.25	**FD.49-LE71ZMK4P**							
	7.6	310	182.71	8530	1.5	27	**2KJ3403- ■ CC23- ■ ■ M1 -Z**	–
	8.6	275	161.50	8630	1.7	27	**2KJ3403- ■ CC23- ■ ■ L1 -Z**	–
	9.5	250	146.82	8700	1.9	27	**2KJ3403- ■ CC23- ■ ■ K1 -Z**	–
	11	220	128.60	8790	2.2	27	**2KJ3403- ■ CC23- ■ ■ J1 -Z**	–
	FD.39-LE71ZMK4P							
	6.6	360	211.06	5560	0.8	18	**2KJ3402- ■ CC23- ■ ■ P1 -Z**	–
	7.3	325	191.87	5690	0.88	18	**2KJ3402- ■ CC23- ■ ■ N1 -Z**	–
	8.5	280	164.56	5850	1	18	**2KJ3402- ■ CC23- ■ ■ M1 -Z**	–
	9.3	255	149.60	5950	1.1	18	**2KJ3402- ■ CC23- ■ ■ L1 -Z**	–
	11	220	131.17	6080	1.3	18	**2KJ3402- ■ CC23- ■ ■ K1 -Z**	–
	12	200	117.08	6150	1.4	18	**2KJ3402- ■ CC23- ■ ■ J1 -Z**	–
	13	179	104.34	6230	1.6	18	**2KJ3402- ■ CC23- ■ ■ H1 -Z**	–
	14	165	96.31	6280	1.8	18	**2KJ3402- ■ CC23- ■ ■ G1 -Z**	–
	17	144	84.32	6360	2	18	**2KJ3402- ■ CC23- ■ ■ F1 -Z**	–
	19	127	73.93	6420	2.3	18	**2KJ3402- ■ CC23- ■ ■ E1 -Z**	–
	FZ.39-LE71ZMK4P							
	24	99	57.99	6530	2.3	17	**2KJ3302- ■ CC23- ■ ■ A2 -Z**	–
	FD.29-LE71ZMK4P							
	13	177	103.36	5220	0.85	11	**2KJ3401- ■ CC23- ■ ■ F1 -Z**	–
	16	154	89.78	5220	0.98	11	**2KJ3401- ■ CC23- ■ ■ E1 -Z**	–
	18	134	78.02	5220	1.1	11	**2KJ3401- ■ CC23- ■ ■ D1 -Z**	–
	20	121	70.43	5220	1.2	11	**2KJ3401- ■ CC23- ■ ■ C1 -Z**	–
	21	113	66.29	5220	1.3	11	**2KJ3401- ■ CC23- ■ ■ B1 -Z**	–
	24	99	57.79	5220	1.5	11	**2KJ3401- ■ CC23- ■ ■ A1 -Z**	–
	FZ.29-LE71ZMK4P							
	25	97	56.73	5220	1.5	11	**2KJ3301- ■ CC23- ■ ■ C2 -Z**	–
	28	86	50.32	5220	1.7	11	**2KJ3301- ■ CC23- ■ ■ B2 -Z**	–
	32	75	43.66	5220	2	11	**2KJ3301- ■ CC23- ■ ■ A2 -Z**	–
	35	68	39.69	5220	2.2	11	**2KJ3301- ■ CC23- ■ ■ X1 -Z**	–
	41	58	34.04	5220	2.6	11	**2KJ3301- ■ CC23- ■ ■ W1 -Z**	–
	45	53	30.95	5220	2.8	11	**2KJ3301- ■ CC23- ■ ■ V1 -Z**	–
	51	46	27.13	5220	3.2	11	**2KJ3301- ■ CC23- ■ ■ U1 -Z**	–
	58	42	24.22	5220	3.6	11	**2KJ3301- ■ CC23- ■ ■ T1 -Z**	–
	65	37	21.58	5060	4.1	11	**2KJ3301- ■ CC23- ■ ■ S1 -Z**	–
	70	34	19.92	4940	4.4	11	**2KJ3301- ■ CC23- ■ ■ R1 -Z**	–
	80	30	17.44	4750	5	11	**2KJ3301- ■ CC23- ■ ■ Q1 -Z**	–
	91	26	15.29	4570	5.7	11	**2KJ3301- ■ CC23- ■ ■ P1 -Z**	–
	101	24	13.88	4430	6.3	11	**2KJ3301- ■ CC23- ■ ■ N1 -Z**	–
	107	22	13.06	4360	6.7	11	**2KJ3301- ■ CC23- ■ ■ M1 -Z**	–
	121	20	11.51	4180	7.3	11	**2KJ3301- ■ CC23- ■ ■ L1 -Z**	–
	140	17	9.99	4010	8	11	**2KJ3301- ■ CC23- ■ ■ K1 -Z**	–
	144	17	9.69	3940	8.6	11	**2KJ3301- ■ CC23- ■ ■ J1 -Z**	–
	162	15	8.63	3810	8.8	11	**2KJ3301- ■ CC23- ■ ■ H1 -Z**	–
	175	14	7.97	3710	8.8	11	**2KJ3301- ■ CC23- ■ ■ G1 -Z**	–
	200	12	6.98	3560	10	11	**2KJ3301- ■ CC23- ■ ■ F1 -Z**	–
	228	10	6.12	3430	11	11	**2KJ3301- ■ CC23- ■ ■ E1 -Z**	–
	251	9.5	5.55	3320	11	11	**2KJ3301- ■ CC23- ■ ■ D1 -Z**	–
	267	8.9	5.22	3260	12	11	**2KJ3301- ■ CC23- ■ ■ C1 -Z**	–
	303	7.9	4.60	3130	12	11	**2KJ3301- ■ CC23- ■ ■ B1 -Z**	–
	349	6.8	4.00	2990	13	11	**2KJ3301- ■ CC23- ■ ■ A1 -Z**	–

Article No. supplement		
Shaft design	**1 or 9**	see page 10/49
Frequency and voltage	**2 or 9**	see page 11/2
Gearbox mounting type	**A, F, H or D**	see page 10/42

© Innomotics 2023

Selection and ordering data

P_N kW	n_2 rpm	T_2 Nm	i –	F_{R2} N	f_B –	m kg	Article No. (Article No. supplement, see below)	Additional identification code **-Z** with order code No. of poles
0.25	**FZ.29-LE63ZMH2P**							
	163	15	17.44	3820	10	11	**2KJ3301- ■ BD23- ■ ■ Q1 -Z**	**P00**
	185	13	15.29	3670	12	11	**2KJ3301- ■ BD23- ■ ■ P1 -Z**	**P00**
	204	12	13.88	3560	13	11	**2KJ3301- ■ BD23- ■ ■ N1 -Z**	**P00**
	217	11	13.06	3490	14	11	**2KJ3301- ■ BD23- ■ ■ M1 -Z**	**P00**
	246	9.7	11.51	3350	15	11	**2KJ3301- ■ BD23- ■ ■ L1 -Z**	**P00**
0.37	**FD.89-LE80MK6P**							
	2.8	1280	335.30	17400	1.4	75	**2KJ3406- ■ DE23- ■ ■ S1 -Z**	**P01**
	3	1160	304.82	17400	1.6	75	**2KJ3406- ■ DE23- ■ ■ R1 -Z**	**P01**
	3.4	1040	273.41	17400	1.8	75	**2KJ3406- ■ DE23- ■ ■ Q1 -Z**	**P01**
	3.8	935	245.82	17400	2	75	**2KJ3406- ■ DE23- ■ ■ P1 -Z**	**P01**
	FD.79-LE80MK6P							
	2.8	1240	324.62	13100	0.81	44	**2KJ3405- ■ DE23- ■ ■ R1 -Z**	**P01**
	3.4	1050	276.09	13500	0.95	44	**2KJ3405- ■ DE23- ■ ■ Q1 -Z**	**P01**
	3.7	955	250.99	13700	1	44	**2KJ3405- ■ DE23- ■ ■ P1 -Z**	**P01**
	FD.79-LE71YMS4P							
	3.9	910	357.00	13700	1.1	40	**2KJ3405- ■ CE23- ■ ■ S1 -Z**	–
	4.3	830	324.62	13900	1.2	40	**2KJ3405- ■ CE23- ■ ■ R1 -Z**	–
	5	705	276.09	14200	1.4	40	**2KJ3405- ■ CE23- ■ ■ Q1 -Z**	–
	5.5	640	250.99	14300	1.6	40	**2KJ3405- ■ CE23- ■ ■ P1 -Z**	–
	6.2	570	223.94	14400	1.7	40	**2KJ3405- ■ CE23- ■ ■ N1 -Z**	–
	6.9	510	200.80	14500	1.9	40	**2KJ3405- ■ CE23- ■ ■ M1 -Z**	–
	FD.69-LE71YMS4P							
	5.1	695	272.00	10600	0.86	33	**2KJ3404- ■ CE23- ■ ■ Q1 -Z**	–
	5.6	630	247.27	10700	0.95	33	**2KJ3404- ■ CE23- ■ ■ P1 -Z**	–
	6.5	540	211.56	11000	1.1	33	**2KJ3404- ■ CE23- ■ ■ N1 -Z**	–
	7.2	490	192.32	11100	1.2	33	**2KJ3404- ■ CE23- ■ ■ M1 -Z**	–
	8.1	435	170.00	11200	1.4	33	**2KJ3404- ■ CE23- ■ ■ L1 -Z**	–
	8.9	395	154.55	11300	1.5	33	**2KJ3404- ■ CE23- ■ ■ K1 -Z**	–
	10	345	135.37	11400	1.7	33	**2KJ3404- ■ CE23- ■ ■ J1 -Z**	–
	11	320	124.96	11500	1.9	33	**2KJ3404- ■ CE23- ■ ■ H1 -Z**	–
	12	280	110.63	11600	2.1	33	**2KJ3404- ■ CE23- ■ ■ G1 -Z**	–
	FD.49-LE71YMS4P							
	5.9	600	234.91	7170	0.8	28	**2KJ3403- ■ CE23- ■ ■ P1 -Z**	–
	6.9	515	200.98	7720	0.93	28	**2KJ3403- ■ CE23- ■ ■ N1 -Z**	–
	7.6	465	182.71	8060	1	28	**2KJ3403- ■ CE23- ■ ■ M1 -Z**	–
	8.5	410	161.50	8240	1.2	28	**2KJ3403- ■ CE23- ■ ■ L1 -Z**	–
	9.4	375	146.82	8340	1.3	28	**2KJ3403- ■ CE23- ■ ■ K1 -Z**	–
	11	325	128.60	8480	1.5	28	**2KJ3403- ■ CE23- ■ ■ J1 -Z**	–
	12	300	118.71	8560	1.6	28	**2KJ3403- ■ CE23- ■ ■ H1 -Z**	–
	13	265	105.10	8660	1.8	28	**2KJ3403- ■ CE23- ■ ■ G1 -Z**	–
	16	220	87.48	8790	2.1	28	**2KJ3403- ■ CE23- ■ ■ F1 -Z**	–
	17	210	82.33	8820	2.3	28	**2KJ3403- ■ CE23- ■ ■ E1 -Z**	–
	FD.39-LE71YMS4P							
	11	335	131.17	5650	0.86	19	**2KJ3402- ■ CE23- ■ ■ K1 -Z**	–
	12	300	117.08	5780	0.97	19	**2KJ3402- ■ CE23- ■ ■ J1 -Z**	–
	13	265	104.34	5910	1.1	19	**2KJ3402- ■ CE23- ■ ■ H1 -Z**	–
	14	245	96.31	5980	1.2	19	**2KJ3402- ■ CE23- ■ ■ G1 -Z**	–
	16	215	84.32	6100	1.3	19	**2KJ3402- ■ CE23- ■ ■ F1 -Z**	–
	19	189	73.93	6190	1.5	19	**2KJ3402- ■ CE23- ■ ■ E1 -Z**	–
	21	172	67.07	6260	1.7	19	**2KJ3402- ■ CE23- ■ ■ D1 -Z**	–

Article No. supplement		
Shaft design	**1 or 9**	see page 10/49
Frequency and voltage	**2 or 9**	see page 11/2
Gearbox mounting type	**A, F, H or D**	see page 10/42

© Innomotics 2023

Selection and ordering data

P_N kW	n_2 rpm	T_2 Nm	i –	F_{R2} N	f_B –	m kg	Article No. (Article No. supplement, see below)	Additional identification code **-Z** with order code No. of poles
0.37	**FD.39-LE71YMS4P**							
	22	162	63.13	6290	1.8	19	**2KJ3402- ■ CE23- ■ ■ C1 -Z**	–
	25	142	55.65	6370	2	19	**2KJ3402- ■ CE23- ■ ■ B1 -Z**	–
	29	124	48.29	6430	2.3	19	**2KJ3402- ■ CE23- ■ ■ A1 -Z**	–
	FZ.39-LE71YMS4P							
	21	167	65.21	6270	1.7	19	**2KJ3302- ■ CE23- ■ ■ B2 -Z**	–
	24	148	57.99	6340	1.5	19	**2KJ3302- ■ CE23- ■ ■ A2 -Z**	–
	27	130	50.91	6410	1.8	19	**2KJ3302- ■ CE23- ■ ■ X1 -Z**	–
	30	119	46.29	6450	2.2	19	**2KJ3302- ■ CE23- ■ ■ W1 -Z**	–
	FD.29-LE71YMS4P							
	20	180	70.43	5220	0.83	13	**2KJ3401- ■ CE23- ■ ■ C1 -Z**	–
	21	170	66.29	5220	0.88	13	**2KJ3401- ■ CE23- ■ ■ B1 -Z**	–
	24	148	57.79	5220	1	13	**2KJ3401- ■ CE23- ■ ■ A1 -Z**	–
	FZ.29-LE71YMS4P							
	24	145	56.73	5220	1	12	**2KJ3301- ■ CE23- ■ ■ C2 -Z**	–
	27	129	50.32	5220	1.2	12	**2KJ3301- ■ CE23- ■ ■ B2 -Z**	–
	32	112	43.66	5220	1.3	12	**2KJ3301- ■ CE23- ■ ■ A2 -Z**	–
	35	102	39.69	5220	1.5	12	**2KJ3301- ■ CE23- ■ ■ X1 -Z**	–
	41	87	34.04	5220	1.7	12	**2KJ3301- ■ CE23- ■ ■ W1 -Z**	–
	45	79	30.95	5220	1.9	12	**2KJ3301- ■ CE23- ■ ■ V1 -Z**	–
	51	70	27.13	5220	2.2	12	**2KJ3301- ■ CE23- ■ ■ U1 -Z**	–
	57	62	24.22	5080	2.4	12	**2KJ3301- ■ CE23- ■ ■ T1 -Z**	–
	64	55	21.58	4930	2.7	12	**2KJ3301- ■ CE23- ■ ■ S1 -Z**	–
	69	51	19.92	4820	2.9	12	**2KJ3301- ■ CE23- ■ ■ R1 -Z**	–
	79	45	17.44	4640	3.4	12	**2KJ3301- ■ CE23- ■ ■ Q1 -Z**	–
	90	39	15.29	4480	3.8	12	**2KJ3301- ■ CE23- ■ ■ P1 -Z**	–
	99	36	13.88	4350	4.2	12	**2KJ3301- ■ CE23- ■ ■ N1 -Z**	–
	106	33	13.06	4280	4.5	12	**2KJ3301- ■ CE23- ■ ■ M1 -Z**	–
	120	30	11.51	4120	4.9	12	**2KJ3301- ■ CE23- ■ ■ L1 -Z**	–
	138	26	9.99	3950	5.3	12	**2KJ3301- ■ CE23- ■ ■ K1 -Z**	–
	142	25	9.69	3880	5.8	12	**2KJ3301- ■ CE23- ■ ■ J1 -Z**	–
	160	22	8.63	3750	5.9	12	**2KJ3301- ■ CE23- ■ ■ H1 -Z**	–
	173	20	7.97	3670	5.9	12	**2KJ3301- ■ CE23- ■ ■ G1 -Z**	–
	198	18	6.98	3520	6.9	12	**2KJ3301- ■ CE23- ■ ■ F1 -Z**	–
	225	16	6.12	3380	7.3	12	**2KJ3301- ■ CE23- ■ ■ E1 -Z**	–
	249	14	5.55	3290	7.6	12	**2KJ3301- ■ CE23- ■ ■ D1 -Z**	–
	264	13	5.22	3230	7.9	12	**2KJ3301- ■ CE23- ■ ■ C1 -Z**	–
	300	12	4.60	3100	8.2	12	**2KJ3301- ■ CE23- ■ ■ B1 -Z**	–
	345	10	4.00	2970	8.9	12	**2KJ3301- ■ CE23- ■ ■ A1 -Z**	–
	FZ.29-LE71ZMH2P							
	159	22	17.44	3790	6.7	10	**2KJ3301- ■ CB23- ■ ■ Q1 -Z**	**P00**
	181	20	15.29	3640	7.7	10	**2KJ3301- ■ CB23- ■ ■ P1 -Z**	**P00**
	200	18	13.88	3530	8.5	10	**2KJ3301- ■ CB23- ■ ■ N1 -Z**	**P00**
	212	17	13.06	3470	9	10	**2KJ3301- ■ CB23- ■ ■ M1 -Z**	**P00**
	241	15	11.51	3340	9.7	10	**2KJ3301- ■ CB23- ■ ■ L1 -Z**	**P00**
	277	13	9.99	3190	11	10	**2KJ3301- ■ CB23- ■ ■ K1 -Z**	**P00**
	286	12	9.69	3150	12	10	**2KJ3301- ■ CB23- ■ ■ J1 -Z**	**P00**
	321	11	8.63	3040	12	10	**2KJ3301- ■ CB23- ■ ■ H1 -Z**	**P00**
	348	10	7.97	2960	12	10	**2KJ3301- ■ CB23- ■ ■ G1 -Z**	**P00**
	397	8.9	6.98	2840	14	10	**2KJ3301- ■ CB23- ■ ■ F1 -Z**	**P00**
	453	7.8	6.12	2730	15	10	**2KJ3301- ■ CB23- ■ ■ E1 -Z**	**P00**

Article No. supplement		
Shaft design	**1 or 9**	see page 10/49
Frequency and voltage	**2 or 9**	see page 11/2
Gearbox mounting type	**A, F, H or D**	see page 10/42

© Innomotics 2023

Selection and ordering data

P_N kW	n_2 rpm	T_2 Nm	i –	F_{R2} N	f_B –	m kg	Article No. (Article No. supplement, see below)	Additional identification code **-Z** with order code No. of poles
0.37	**FZ.29-LE71ZMH2P**							
	499	7.1	5.55	2640	15	10	**2KJ3301- ■ CB23- ■ ■ D1 -Z**	**P00**
0.55	**FD.89-LE80ZMQ6P**							
	2.8	1880	335.30	17400	0.98	75	**2KJ3406- ■ DF23- ■ ■ S1 -Z**	**P01**
	3.1	1710	304.82	17400	1.1	75	**2KJ3406- ■ DF23- ■ ■ R1 -Z**	**P01**
	3.4	1530	273.41	17400	1.2	75	**2KJ3406- ■ DF23- ■ ■ Q1 -Z**	**P01**
	3.8	1380	245.82	17400	1.3	75	**2KJ3406- ■ DF23- ■ ■ P1 -Z**	**P01**
	FD.89-LE80MH4P							
	4.3	1220	335.30	17400	1.5	76	**2KJ3406- ■ DC23- ■ ■ S1 -Z**	–
	4.7	1110	304.82	17400	1.7	76	**2KJ3406- ■ DC23- ■ ■ R1 -Z**	–
	5.3	995	273.41	17400	1.9	76	**2KJ3406- ■ DC23- ■ ■ Q1 -Z**	–
	5.9	895	245.82	17400	2.1	76	**2KJ3406- ■ DC23- ■ ■ P1 -Z**	–
	FD.79-LE80MH4P							
	4.4	1180	324.62	13200	0.84	45	**2KJ3405- ■ DC23- ■ ■ R1 -Z**	–
	5.2	1000	276.09	13600	0.99	45	**2KJ3405- ■ DC23- ■ ■ Q1 -Z**	–
	5.7	915	250.99	13700	1.1	45	**2KJ3405- ■ DC23- ■ ■ P1 -Z**	–
	6.4	815	223.94	13900	1.2	45	**2KJ3405- ■ DC23- ■ ■ N1 -Z**	–
	7.2	730	200.80	14100	1.4	45	**2KJ3405- ■ DC23- ■ ■ M1 -Z**	–
	8	660	180.99	14200	1.5	45	**2KJ3405- ■ DC23- ■ ■ L1 -Z**	–
	8.6	605	167.07	14400	1.6	45	**2KJ3405- ■ DC23- ■ ■ K1 -Z**	–
	9.4	555	152.51	14500	1.8	45	**2KJ3405- ■ DC23- ■ ■ J1 -Z**	–
	11	460	126.54	14500	2.2	45	**2KJ3405- ■ DC23- ■ ■ H1 -Z**	–
	FD.69-LE80MH4P							
	7.5	700	192.32	10600	0.86	38	**2KJ3404- ■ DC23- ■ ■ M1 -Z**	–
	8.5	620	170.00	10800	0.97	38	**2KJ3404- ■ DC23- ■ ■ L1 -Z**	–
	9.3	560	154.55	10900	1.1	38	**2KJ3404- ■ DC23- ■ ■ K1 -Z**	–
	11	490	135.37	11100	1.2	38	**2KJ3404- ■ DC23- ■ ■ J1 -Z**	–
	12	455	124.96	11200	1.3	38	**2KJ3404- ■ DC23- ■ ■ H1 -Z**	–
	13	400	110.63	11300	1.5	38	**2KJ3404- ■ DC23- ■ ■ G1 -Z**	–
	16	335	92.08	11400	1.8	38	**2KJ3404- ■ DC23- ■ ■ F1 -Z**	–
	17	315	86.67	11500	1.9	38	**2KJ3404- ■ DC23- ■ ■ E1 -Z**	–
	19	280	77.65	11600	2.1	38	**2KJ3404- ■ DC23- ■ ■ D1 -Z**	–
	FD.49-LE80MH4P							
	8.9	585	161.50	7270	0.81	33	**2KJ3403- ■ DC23- ■ ■ L1 -Z**	–
	9.8	535	146.82	7600	0.9	33	**2KJ3403- ■ DC23- ■ ■ K1 -Z**	–
	11	465	128.60	8060	1	33	**2KJ3403- ■ DC23- ■ ■ J1 -Z**	–
	12	430	118.71	8180	1.1	33	**2KJ3403- ■ DC23- ■ ■ H1 -Z**	–
	14	380	105.10	8330	1.3	33	**2KJ3403- ■ DC23- ■ ■ G1 -Z**	–
	16	315	87.48	8510	1.5	33	**2KJ3403- ■ DC23- ■ ■ F1 -Z**	–
	17	300	82.33	8560	1.6	33	**2KJ3403- ■ DC23- ■ ■ E1 -Z**	–
	20	265	73.77	8660	1.8	33	**2KJ3403- ■ DC23- ■ ■ D1 -Z**	–
	23	225	62.81	8770	2.1	33	**2KJ3403- ■ DC23- ■ ■ C1 -Z**	–
	27	196	53.83	8450	2.4	33	**2KJ3403- ■ DC23- ■ ■ B1 -Z**	–
	FZ.49-LE80MH4P							
	23	220	61.43	8730	2.1	32	**2KJ3303- ■ DC23- ■ ■ X1 -Z**	–
	26	200	55.85	8540	2.4	32	**2KJ3303- ■ DC23- ■ ■ W1 -Z**	–
	FD.39-LE80MH4P							
	15	350	96.31	5590	0.83	23	**2KJ3402- ■ DC23- ■ ■ G1 -Z**	–
	17	305	84.32	5760	0.94	23	**2KJ3402- ■ DC23- ■ ■ F1 -Z**	–
	19	270	73.93	5890	1.1	23	**2KJ3402- ■ DC23- ■ ■ E1 -Z**	–
	21	245	67.07	5980	1.2	23	**2KJ3402- ■ DC23- ■ ■ D1 -Z**	–
	23	230	63.13	6040	1.3	23	**2KJ3402- ■ DC23- ■ ■ C1 -Z**	–

Article No. supplement		
Shaft design	**1 or 9**	see page 10/49
Frequency and voltage	**2 or 9**	see page 11/2
Gearbox mounting type	**A, F, H or D**	see page 10/42

© Innomotics 2023

Selection and ordering data

P_N kW	n_2 rpm	T_2 Nm	i –	F_{R2} N	f_B –	m kg	Article No. (Article No. supplement, see below)	Additional identification code **-Z** with order code No. of poles
0.55	**FD.39-LE80MH4P**							
	26	200	55.65	6150	1.4	23	**2KJ3402- ■ DC23- ■ ■ B1 -Z**	–
	30	176	48.29	6240	1.6	23	**2KJ3402- ■ DC23- ■ ■ A1 -Z**	–
	FZ.39-LE80MH4P							
	25	210	57.99	6110	1.1	23	**2KJ3302- ■ DC23- ■ ■ A2 -Z**	–
	28	186	50.91	6200	1.3	23	**2KJ3302- ■ DC23- ■ ■ X1 -Z**	–
	31	169	46.29	6270	1.5	23	**2KJ3302- ■ DC23- ■ ■ W1 -Z**	–
	36	144	39.60	6360	2	23	**2KJ3302- ■ DC23- ■ ■ V1 -Z**	–
	40	131	36.00	6410	1.9	23	**2KJ3302- ■ DC23- ■ ■ U1 -Z**	–
	45	116	31.82	6460	2.5	23	**2KJ3302- ■ DC23- ■ ■ T1 -Z**	–
	50	106	28.93	6500	2.6	23	**2KJ3302- ■ DC23- ■ ■ S1 -Z**	–
	57	92	25.34	6390	2.9	23	**2KJ3302- ■ DC23- ■ ■ R1 -Z**	–
	62	85	23.39	6260	3	23	**2KJ3302- ■ DC23- ■ ■ Q1 -Z**	–
	FZ.29-LE80MH4P							
	29	184	50.32	5220	0.82	17	**2KJ3301- ■ DC23- ■ ■ B2 -Z**	–
	33	159	43.66	5220	0.94	17	**2KJ3301- ■ DC23- ■ ■ A2 -Z**	–
	36	145	39.69	5220	1	17	**2KJ3301- ■ DC23- ■ ■ X1 -Z**	–
	42	124	34.04	5150	1.2	17	**2KJ3301- ■ DC23- ■ ■ W1 -Z**	–
	47	113	30.95	5050	1.3	17	**2KJ3301- ■ DC23- ■ ■ V1 -Z**	–
	53	99	27.13	4910	1.5	17	**2KJ3301- ■ DC23- ■ ■ U1 -Z**	–
	59	88	24.22	4790	1.7	17	**2KJ3301- ■ DC23- ■ ■ T1 -Z**	–
	67	79	21.58	4650	1.9	17	**2KJ3301- ■ DC23- ■ ■ S1 -Z**	–
	72	73	19.92	4560	2.1	17	**2KJ3301- ■ DC23- ■ ■ R1 -Z**	–
	83	64	17.44	4410	2.4	17	**2KJ3301- ■ DC23- ■ ■ Q1 -Z**	–
	94	56	15.29	4270	2.7	17	**2KJ3301- ■ DC23- ■ ■ P1 -Z**	–
	104	51	13.88	4160	3	17	**2KJ3301- ■ DC23- ■ ■ N1 -Z**	–
	110	48	13.06	4090	3.1	17	**2KJ3301- ■ DC23- ■ ■ M1 -Z**	–
	125	42	11.51	3960	3.4	17	**2KJ3301- ■ DC23- ■ ■ L1 -Z**	–
	144	36	9.99	3810	3.7	17	**2KJ3301- ■ DC23- ■ ■ K1 -Z**	–
	149	35	9.69	3720	4	17	**2KJ3301- ■ DC23- ■ ■ J1 -Z**	–
	167	32	8.63	3600	4.1	17	**2KJ3301- ■ DC23- ■ ■ H1 -Z**	–
	181	29	7.97	3530	4.1	17	**2KJ3301- ■ DC23- ■ ■ G1 -Z**	–
0.75	**FD.129-LE90SQ6P**							
	2.3	3130	413.00	37500	1.5	171	**2KJ3408- ■ EC23- ■ ■ T1 -Z**	**P01**
	2.5	2880	381.00	37500	1.7	171	**2KJ3408- ■ EC23- ■ ■ S1 -Z**	**P01**
	2.7	2660	351.00	37500	1.8	171	**2KJ3408- ■ EC23- ■ ■ R1 -Z**	**P01**
	FD.109-LE90SQ6P							
	2.3	3100	410.00	25000	1	118	**2KJ3407- ■ EC23- ■ ■ T1 -Z**	**P01**
	2.6	2800	370.00	25000	1.1	118	**2KJ3407- ■ EC23- ■ ■ S1 -Z**	**P01**
	2.8	2540	335.70	25000	1.2	118	**2KJ3407- ■ EC23- ■ ■ R1 -Z**	**P01**
	3	2340	309.87	25000	1.3	118	**2KJ3407- ■ EC23- ■ ■ Q1 -Z**	**P01**
	FD.89-LE90SQ6P							
	3.1	2310	304.82	17400	0.8	78	**2KJ3406- ■ EC23- ■ ■ R1 -Z**	**P01**
	3.5	2070	273.41	17400	0.89	78	**2KJ3406- ■ EC23- ■ ■ Q1 -Z**	**P01**
	3.8	1860	245.82	17400	0.99	78	**2KJ3406- ■ EC23- ■ ■ P1 -Z**	**P01**
	FD.89-LE80ZMQ4P							
	4.3	1650	335.30	17400	1.1	75	**2KJ3406- ■ DF23- ■ ■ S1 -Z**	–
	4.8	1500	304.82	17400	1.2	75	**2KJ3406- ■ DF23- ■ ■ R1 -Z**	–
	5.3	1350	273.41	17400	1.4	75	**2KJ3406- ■ DF23- ■ ■ Q1 -Z**	–
	5.9	1210	245.82	17400	1.5	75	**2KJ3406- ■ DF23- ■ ■ P1 -Z**	–
	6.5	1090	222.33	17400	1.7	75	**2KJ3406- ■ DF23- ■ ■ N1 -Z**	–
	7.1	1010	205.23	17400	1.8	75	**2KJ3406- ■ DF23- ■ ■ M1 -Z**	–

Article No. supplement		
Shaft design	**1 or 9**	see page 10/49
Frequency and voltage	**2 or 9**	see page 11/2
Gearbox mounting type	**A, F, H or D**	see page 10/42

© Innomotics 2023

Selection and ordering data

P_N kW	n_2 rpm	T_2 Nm	i –	F_{R2} N	f_B –	m kg	Article No. (Article No. supplement, see below)	Additional identification code **-Z** with order code No. of poles
0.75	**FD.89-LE80ZMQ4P**							
	7.7	925	188.00	17400	2	75	**2KJ3406- ■ DF23- ■ ■ L1 -Z**	–
	FD.79-LE80ZMQ4P							
	5.8	1240	250.99	13100	0.81	44	**2KJ3405- ■ DF23- ■ ■ P1 -Z**	–
	6.5	1100	223.94	13400	0.9	44	**2KJ3405- ■ DF23- ■ ■ N1 -Z**	–
	7.2	990	200.80	13600	1	44	**2KJ3405- ■ DF23- ■ ■ M1 -Z**	–
	8	890	180.99	13800	1.1	44	**2KJ3405- ■ DF23- ■ ■ L1 -Z**	–
	8.7	825	167.07	13900	1.2	44	**2KJ3405- ■ DF23- ■ ■ K1 -Z**	–
	9.5	750	152.51	14100	1.3	44	**2KJ3405- ■ DF23- ■ ■ J1 -Z**	–
	11	625	126.54	14300	1.6	44	**2KJ3405- ■ DF23- ■ ■ H1 -Z**	–
	12	585	119.10	14400	1.7	44	**2KJ3405- ■ DF23- ■ ■ G1 -Z**	–
	13	555	112.48	14500	1.8	44	**2KJ3405- ■ DF23- ■ ■ F1 -Z**	–
	15	470	95.71	14500	2.1	44	**2KJ3405- ■ DF23- ■ ■ E1 -Z**	–
	FD.69-LE80ZMQ4P							
	11	665	135.37	10700	0.9	37	**2KJ3404- ■ DF23- ■ ■ J1 -Z**	–
	12	615	124.96	10800	0.97	37	**2KJ3404- ■ DF23- ■ ■ H1 -Z**	–
	13	545	110.63	10900	1.1	37	**2KJ3404- ■ DF23- ■ ■ G1 -Z**	–
	16	455	92.08	11200	1.3	37	**2KJ3404- ■ DF23- ■ ■ F1 -Z**	–
	17	425	86.67	11200	1.4	37	**2KJ3404- ■ DF23- ■ ■ E1 -Z**	–
	19	380	77.65	11300	1.6	37	**2KJ3404- ■ DF23- ■ ■ D1 -Z**	–
	22	325	66.11	11400	1.8	37	**2KJ3404- ■ DF23- ■ ■ C1 -Z**	–
	26	280	56.67	11000	2.1	37	**2KJ3404- ■ DF23- ■ ■ B1 -Z**	–
	30	240	48.80	10600	2.5	37	**2KJ3404- ■ DF23- ■ ■ A1 -Z**	–
	FZ.69-LE80ZMQ4P							
	22	315	64.67	11400	1.9	36	**2KJ3304- ■ DF23- ■ ■ X1 -Z**	–
	25	290	58.79	11100	2.1	36	**2KJ3304- ■ DF23- ■ ■ W1 -Z**	–
	29	245	50.00	10700	2.4	36	**2KJ3304- ■ DF23- ■ ■ V1 -Z**	–
	FD.49-LE80ZMQ4P							
	12	585	118.71	7270	0.82	32	**2KJ3403- ■ DF23- ■ ■ H1 -Z**	–
	14	515	105.10	7720	0.92	32	**2KJ3403- ■ DF23- ■ ■ G1 -Z**	–
	17	430	87.48	8180	1.1	32	**2KJ3403- ■ DF23- ■ ■ F1 -Z**	–
	18	405	82.33	8250	1.2	32	**2KJ3403- ■ DF23- ■ ■ E1 -Z**	–
	20	360	73.77	8380	1.3	32	**2KJ3403- ■ DF23- ■ ■ D1 -Z**	–
	23	310	62.81	8190	1.5	32	**2KJ3403- ■ DF23- ■ ■ C1 -Z**	–
	27	265	53.83	7970	1.8	32	**2KJ3403- ■ DF23- ■ ■ B1 -Z**	–
	31	225	46.36	7760	2.1	32	**2KJ3403- ■ DF23- ■ ■ A1 -Z**	–
	FZ.49-LE80ZMQ4P							
	24	300	61.43	8180	1.6	31	**2KJ3303- ■ DF23- ■ ■ X1 -Z**	–
	26	275	55.85	8030	1.7	31	**2KJ3303- ■ DF23- ■ ■ W1 -Z**	–
	31	235	47.50	7770	2	31	**2KJ3303- ■ DF23- ■ ■ V1 -Z**	–
	34	210	43.18	7640	2.3	31	**2KJ3303- ■ DF23- ■ ■ U1 -Z**	–
	38	190	38.53	7440	2.5	31	**2KJ3303- ■ DF23- ■ ■ T1 -Z**	–
	FD.39-LE80ZMQ4P							
	22	330	67.07	5670	0.88	22	**2KJ3402- ■ DF23- ■ ■ D1 -Z**	–
	23	310	63.13	5740	0.93	22	**2KJ3402- ■ DF23- ■ ■ C1 -Z**	–
	26	275	55.65	5870	1.1	22	**2KJ3402- ■ DF23- ■ ■ B1 -Z**	–
	30	235	48.29	6020	1.2	22	**2KJ3402- ■ DF23- ■ ■ A1 -Z**	–
	FZ.39-LE80ZMQ4P							
	25	285	57.99	5830	0.8	22	**2KJ3302- ■ DF23- ■ ■ A2 -Z**	–
	28	250	50.91	5970	0.95	22	**2KJ3302- ■ DF23- ■ ■ X1 -Z**	–
	31	225	46.29	6060	1.1	22	**2KJ3302- ■ DF23- ■ ■ W1 -Z**	–
	37	196	39.60	6170	1.5	22	**2KJ3302- ■ DF23- ■ ■ V1 -Z**	–

Article No. supplement		
Shaft design	**1 or 9**	see page 10/49
Frequency and voltage	**2 or 9**	see page 11/2
Gearbox mounting type	**A, F, H or D**	see page 10/42

© Innomotics 2023

Selection and ordering data

P_N kW	n_2 rpm	T_2 Nm	i –	F_{R2} N	f_B –	m kg	Article No. (Article No. supplement, see below)	Additional identification code **-Z** with order code No. of poles
0.75	**FZ.39-LE80ZMQ4P**							
	40	178	36.00	6230	1.4	22	**2KJ3302- ■ DF23- ■ ■ U1 -Z**	–
	46	157	31.82	6310	1.8	22	**2KJ3302- ■ DF23- ■ ■ T1 -Z**	–
	50	143	28.93	6310	1.9	22	**2KJ3302- ■ DF23- ■ ■ S1 -Z**	–
	57	125	25.34	6130	2.1	22	**2KJ3302- ■ DF23- ■ ■ R1 -Z**	–
	62	116	23.39	6010	2.3	22	**2KJ3302- ■ DF23- ■ ■ Q1 -Z**	–
	70	102	20.71	5840	2.4	22	**2KJ3302- ■ DF23- ■ ■ P1 -Z**	–
	84	85	17.24	5580	2.8	22	**2KJ3302- ■ DF23- ■ ■ N1 -Z**	–
	89	80	16.22	5490	2.9	22	**2KJ3302- ■ DF23- ■ ■ M1 -Z**	–
	100	72	14.54	5330	3.1	22	**2KJ3302- ■ DF23- ■ ■ L1 -Z**	–
	117	61	12.38	5100	3.4	22	**2KJ3302- ■ DF23- ■ ■ K1 -Z**	–
	137	52	10.61	4890	3.8	22	**2KJ3302- ■ DF23- ■ ■ J1 -Z**	–
	179	40	8.10	4490	4.2	22	**2KJ3302- ■ DF23- ■ ■ G1 -Z**	–
	FZ.29-LE80ZMQ4P							
	43	168	34.04	4770	0.89	16	**2KJ3301- ■ DF23- ■ ■ W1 -Z**	–
	47	153	30.95	4700	0.98	16	**2KJ3301- ■ DF23- ■ ■ V1 -Z**	–
	53	134	27.13	4600	1.1	16	**2KJ3301- ■ DF23- ■ ■ U1 -Z**	–
	60	120	24.22	4510	1.3	16	**2KJ3301- ■ DF23- ■ ■ T1 -Z**	–
	67	107	21.58	4410	1.4	16	**2KJ3301- ■ DF23- ■ ■ S1 -Z**	–
	73	98	19.92	4340	1.5	16	**2KJ3301- ■ DF23- ■ ■ R1 -Z**	–
	83	86	17.44	4220	1.7	16	**2KJ3301- ■ DF23- ■ ■ Q1 -Z**	–
	95	76	15.29	4090	2	16	**2KJ3301- ■ DF23- ■ ■ P1 -Z**	–
	104	69	13.88	4000	2.2	16	**2KJ3301- ■ DF23- ■ ■ N1 -Z**	–
	111	64	13.06	3950	2.3	16	**2KJ3301- ■ DF23- ■ ■ M1 -Z**	–
	126	57	11.51	3820	2.5	16	**2KJ3301- ■ DF23- ■ ■ L1 -Z**	–
	145	49	9.99	3690	2.8	16	**2KJ3301- ■ DF23- ■ ■ K1 -Z**	–
	150	48	9.69	3590	3	16	**2KJ3301- ■ DF23- ■ ■ J1 -Z**	–
	168	43	8.63	3490	3	16	**2KJ3301- ■ DF23- ■ ■ H1 -Z**	–
	182	39	7.97	3420	3	16	**2KJ3301- ■ DF23- ■ ■ G1 -Z**	–
	208	34	6.98	3300	3.6	16	**2KJ3301- ■ DF23- ■ ■ F1 -Z**	–
	237	30	6.12	3190	3.8	16	**2KJ3301- ■ DF23- ■ ■ E1 -Z**	–
	261	27	5.55	3110	3.9	16	**2KJ3301- ■ DF23- ■ ■ D1 -Z**	–
	278	26	5.22	3050	4.1	16	**2KJ3301- ■ DF23- ■ ■ C1 -Z**	–
	315	23	4.60	2940	4.3	16	**2KJ3301- ■ DF23- ■ ■ B1 -Z**	–
	362	20	4.00	2820	4.6	16	**2KJ3301- ■ DF23- ■ ■ A1 -Z**	–
	FZ.29-LE80ME2P							
	163	44	17.44	3570	3.4	15	**2KJ3301- ■ DB23- ■ ■ Q1 -Z**	**P00**
	186	38	15.29	3450	3.9	15	**2KJ3301- ■ DB23- ■ ■ P1 -Z**	**P00**
	205	35	13.88	3360	4.3	15	**2KJ3301- ■ DB23- ■ ■ N1 -Z**	**P00**
1.1	**FD.149-LE100ZLSA6P**							
	2.5	4160	377.00	65000	1.9	278	**2KJ3410- ■ FN23- ■ ■ W1 -Z**	**P01**
	FD.129-LE100ZLSA6P							
	2.3	4560	413.00	37400	1.1	191	**2KJ3408- ■ FN23- ■ ■ T1 -Z**	**P01**
	2.5	4210	381.00	37500	1.2	191	**2KJ3408- ■ FN23- ■ ■ S1 -Z**	**P01**
	2.7	3880	351.00	37500	1.2	191	**2KJ3408- ■ FN23- ■ ■ R1 -Z**	**P01**
	3.2	3310	299.31	37500	1.5	191	**2KJ3408- ■ FN23- ■ ■ Q1 -Z**	**P01**
	FD.129-LE90SM4P							
	3.5	3010	413.00	37500	1.6	171	**2KJ3408- ■ EK23- ■ ■ T1 -Z**	–
	3.8	2770	381.00	37500	1.7	171	**2KJ3408- ■ EK23- ■ ■ S1 -Z**	–
	4.1	2560	351.00	37500	1.9	171	**2KJ3408- ■ EK23- ■ ■ R1 -Z**	–
	FD.109-LE100ZLSA6P							
	2.8	3710	335.70	25000	0.84	137	**2KJ3407- ■ FN23- ■ ■ R1 -Z**	**P01**

Article No. supplement		
Shaft design	**1 or 9**	see page 10/49
Frequency and voltage	**2 or 9**	see page 11/2
Gearbox mounting type	**A, F, H or D**	see page 10/42

© Innomotics 2023

Selection and ordering data

P_N kW	n_2 rpm	T_2 Nm	i –	F_{R2} N	f_B –	m kg	Article No. (Article No. supplement, see below)	Additional identification code **-Z** with order code No. of poles
1.1	**FD.109-LE100ZLSA6P**							
	3.1	3420	309.87	25000	0.9	137	**2KJ3407- ■ FN23- ■ ■ Q1 -Z**	**P01**
	FD.109-LE90SM4P							
	3.5	2990	410.00	25000	1	118	**2KJ3407- ■ EK23- ■ ■ T1 -Z**	–
	3.9	2690	370.00	25000	1.1	118	**2KJ3407- ■ EK23- ■ ■ S1 -Z**	–
	4.3	2440	335.70	25000	1.3	118	**2KJ3407- ■ EK23- ■ ■ R1 -Z**	–
	4.6	2260	309.87	25000	1.4	118	**2KJ3407- ■ EK23- ■ ■ Q1 -Z**	–
	5.1	2050	281.68	25000	1.5	118	**2KJ3407- ■ EK23- ■ ■ P1 -Z**	–
	6	1740	238.52	25000	1.8	118	**2KJ3407- ■ EK23- ■ ■ N1 -Z**	–
	6.4	1630	224.49	25000	1.9	118	**2KJ3407- ■ EK23- ■ ■ M1 -Z**	–
	6.9	1510	207.31	25000	2	118	**2KJ3407- ■ EK23- ■ ■ L1 -Z**	–
	FD.89-LE90SM4P							
	4.7	2220	304.82	17400	0.83	78	**2KJ3406- ■ EK23- ■ ■ R1 -Z**	–
	5.3	1990	273.41	17400	0.93	78	**2KJ3406- ■ EK23- ■ ■ Q1 -Z**	–
	5.9	1790	245.82	17400	1	78	**2KJ3406- ■ EK23- ■ ■ P1 -Z**	–
	6.5	1620	222.33	17400	1.1	78	**2KJ3406- ■ EK23- ■ ■ N1 -Z**	–
	7	1490	205.23	17400	1.2	78	**2KJ3406- ■ EK23- ■ ■ M1 -Z**	–
	7.7	1370	188.00	17400	1.3	78	**2KJ3406- ■ EK23- ■ ■ L1 -Z**	–
	9.1	1150	157.74	17400	1.6	78	**2KJ3406- ■ EK23- ■ ■ K1 -Z**	–
	9.7	1080	148.46	17400	1.7	78	**2KJ3406- ■ EK23- ■ ■ J1 -Z**	–
	11	990	136.21	17400	1.9	78	**2KJ3406- ■ EK23- ■ ■ H1 -Z**	–
	12	865	118.98	17400	2.1	78	**2KJ3406- ■ EK23- ■ ■ G1 -Z**	–
	FD.79-LE90SM4P							
	8.6	1210	167.07	13200	0.82	46	**2KJ3405- ■ EK23- ■ ■ K1 -Z**	–
	9.4	1110	152.51	13400	0.9	46	**2KJ3405- ■ EK23- ■ ■ J1 -Z**	–
	11	920	126.54	13700	1.1	46	**2KJ3405- ■ EK23- ■ ■ H1 -Z**	–
	12	865	119.10	13800	1.2	46	**2KJ3405- ■ EK23- ■ ■ G1 -Z**	–
	13	820	112.48	13900	1.2	46	**2KJ3405- ■ EK23- ■ ■ F1 -Z**	–
	15	695	95.71	14200	1.4	46	**2KJ3405- ■ EK23- ■ ■ E1 -Z**	–
	18	595	81.99	14400	1.7	46	**2KJ3405- ■ EK23- ■ ■ D1 -Z**	–
	20	525	72.09	14500	1.9	46	**2KJ3405- ■ EK23- ■ ■ C1 -Z**	–
	24	440	60.82	14500	2.3	46	**2KJ3405- ■ EK23- ■ ■ B1 -Z**	–
	FD.69-LE90SM4P							
	16	670	92.08	10600	0.89	37	**2KJ3404- ■ EK23- ■ ■ F1 -Z**	–
	17	630	86.67	10700	0.95	37	**2KJ3404- ■ EK23- ■ ■ E1 -Z**	–
	19	565	77.65	10700	1.1	37	**2KJ3404- ■ EK23- ■ ■ D1 -Z**	–
	22	480	66.11	10500	1.2	37	**2KJ3404- ■ EK23- ■ ■ C1 -Z**	–
	25	410	56.67	10200	1.5	37	**2KJ3404- ■ EK23- ■ ■ B1 -Z**	–
	30	355	48.80	9980	1.7	37	**2KJ3404- ■ EK23- ■ ■ A1 -Z**	–
	FZ.69-LE90SM4P							
	22	470	64.67	10400	1.3	37	**2KJ3304- ■ EK23- ■ ■ X1 -Z**	–
	24	425	58.79	10300	1.4	37	**2KJ3304- ■ EK23- ■ ■ W1 -Z**	–
	29	365	50.00	10000	1.6	37	**2KJ3304- ■ EK23- ■ ■ V1 -Z**	–
	32	330	45.45	9850	1.8	37	**2KJ3304- ■ EK23- ■ ■ U1 -Z**	–
	36	295	40.56	9620	2	37	**2KJ3304- ■ EK23- ■ ■ T1 -Z**	–
	40	265	36.36	9400	2.3	37	**2KJ3304- ■ EK23- ■ ■ S1 -Z**	–
	44	235	32.78	9210	2.5	37	**2KJ3304- ■ EK23- ■ ■ R1 -Z**	–
	48	220	30.26	9020	2.7	37	**2KJ3304- ■ EK23- ■ ■ Q1 -Z**	–
	FD.49-LE90SM4P							
	17	600	82.33	7170	0.8	32	**2KJ3403- ■ EK23- ■ ■ E1 -Z**	–
	20	535	73.77	7310	0.89	32	**2KJ3403- ■ EK23- ■ ■ D1 -Z**	–
	23	455	62.81	7270	1	32	**2KJ3403- ■ EK23- ■ ■ C1 -Z**	–

Article No. supplement		
Shaft design	**1 or 9**	see page 10/49
Frequency and voltage	**2 or 9**	see page 11/2
Gearbox mounting type	**A, F, H or D**	see page 10/42

© Innomotics 2023

Selection and ordering data

P_N kW	n_2 rpm	T_2 Nm	i –	F_{R2} N	f_B –	m kg	Article No. (Article No. supplement, see below)	Additional identification code **-Z** with order code No. of poles
1.1	**FD.49-LE90SM4P**							
	27	390	53.83	7180	1.2	32	**2KJ3403- ■ EK23- ■ ■ B1 -Z**	–
	31	335	46.36	7060	1.4	32	**2KJ3403- ■ EK23- ■ ■ A1 -Z**	–
	FZ.49-LE90SM4P							
	23	445	61.43	7260	1.1	32	**2KJ3303- ■ EK23- ■ ■ X1 -Z**	–
	26	405	55.85	7200	1.2	32	**2KJ3303- ■ EK23- ■ ■ W1 -Z**	–
	30	345	47.50	7070	1.4	32	**2KJ3303- ■ EK23- ■ ■ V1 -Z**	–
	33	315	43.18	6980	1.5	32	**2KJ3303- ■ EK23- ■ ■ U1 -Z**	–
	37	280	38.53	6870	1.7	32	**2KJ3303- ■ EK23- ■ ■ T1 -Z**	–
	42	250	34.55	6760	1.9	32	**2KJ3303- ■ EK23- ■ ■ S1 -Z**	–
	46	225	31.14	6630	2.1	32	**2KJ3303- ■ EK23- ■ ■ R1 -Z**	–
	50	210	28.74	6520	2.3	32	**2KJ3303- ■ EK23- ■ ■ Q1 -Z**	–
	55	191	26.24	6410	2.5	32	**2KJ3303- ■ EK23- ■ ■ P1 -Z**	–
	66	159	21.77	6150	3	32	**2KJ3303- ■ EK23- ■ ■ N1 -Z**	–
	FD.39-LE90SM4P							
	30	350	48.29	5590	0.82	25	**2KJ3402- ■ EK23- ■ ■ A1 -Z**	–
	FZ.39-LE90SM4P							
	36	285	39.60	5830	1	24	**2KJ3302- ■ EK23- ■ ■ V1 -Z**	–
	40	260	36.00	5930	0.97	24	**2KJ3302- ■ EK23- ■ ■ U1 -Z**	–
	45	230	31.82	5920	1.2	24	**2KJ3302- ■ EK23- ■ ■ T1 -Z**	–
	50	210	28.93	5830	1.3	24	**2KJ3302- ■ EK23- ■ ■ S1 -Z**	–
	57	185	25.34	5700	1.4	24	**2KJ3302- ■ EK23- ■ ■ R1 -Z**	–
	62	171	23.39	5610	1.5	24	**2KJ3302- ■ EK23- ■ ■ Q1 -Z**	–
	70	151	20.71	5490	1.7	24	**2KJ3302- ■ EK23- ■ ■ P1 -Z**	–
	84	126	17.24	5280	1.9	24	**2KJ3302- ■ EK23- ■ ■ N1 -Z**	–
	89	118	16.22	5220	1.9	24	**2KJ3302- ■ EK23- ■ ■ M1 -Z**	–
	99	106	14.54	5090	2.1	24	**2KJ3302- ■ EK23- ■ ■ L1 -Z**	–
	116	90	12.38	4900	2.3	24	**2KJ3302- ■ EK23- ■ ■ K1 -Z**	–
	136	77	10.61	4720	2.6	24	**2KJ3302- ■ EK23- ■ ■ J1 -Z**	–
	158	67	9.13	4540	2.8	24	**2KJ3302- ■ EK23- ■ ■ H1 -Z**	–
	178	59	8.10	4350	2.8	24	**2KJ3302- ■ EK23- ■ ■ G1 -Z**	–
	214	49	6.74	4140	3.1	24	**2KJ3302- ■ EK23- ■ ■ F1 -Z**	–
	227	46	6.35	4080	3.2	24	**2KJ3302- ■ EK23- ■ ■ E1 -Z**	–
	253	42	5.69	3950	3.4	24	**2KJ3302- ■ EK23- ■ ■ D1 -Z**	–
	298	35	4.84	3780	3.6	24	**2KJ3302- ■ EK23- ■ ■ C1 -Z**	–
	347	30	4.15	3620	3.9	24	**2KJ3302- ■ EK23- ■ ■ B1 -Z**	–
	403	26	3.57	3460	4.1	24	**2KJ3302- ■ EK23- ■ ■ A1 -Z**	–
	FZ.39-LE80ZMJ2P							
	167	63	17.24	4470	3.7	22	**2KJ3302- ■ DM23- ■ ■ N1 -Z**	**P00**
	178	59	16.22	4400	3.9	22	**2KJ3302- ■ DM23- ■ ■ M1 -Z**	**P00**
	198	53	14.54	4270	4.2	22	**2KJ3302- ■ DM23- ■ ■ L1 -Z**	**P00**
	FZ.29-LE90SM4P							
	59	177	24.22	4050	0.85	18	**2KJ3301- ■ EK23- ■ ■ T1 -Z**	–
	67	157	21.58	4000	0.95	18	**2KJ3301- ■ EK23- ■ ■ S1 -Z**	–
	72	145	19.92	3960	1	18	**2KJ3301- ■ EK23- ■ ■ R1 -Z**	–
	83	127	17.44	3890	1.2	18	**2KJ3301- ■ EK23- ■ ■ Q1 -Z**	–
	94	112	15.29	3800	1.3	18	**2KJ3301- ■ EK23- ■ ■ P1 -Z**	–
	104	101	13.88	3740	1.5	18	**2KJ3301- ■ EK23- ■ ■ N1 -Z**	–
	110	95	13.06	3700	1.6	18	**2KJ3301- ■ EK23- ■ ■ M1 -Z**	–
	125	84	11.51	3610	1.7	18	**2KJ3301- ■ EK23- ■ ■ L1 -Z**	–
	144	73	9.99	3500	1.9	18	**2KJ3301- ■ EK23- ■ ■ K1 -Z**	–

Article No. supplement		
Shaft design	**1 or 9**	see page 10/49
Frequency and voltage	**2 or 9**	see page 11/2
Gearbox mounting type	**A, F, H or D**	see page 10/42

© Innomotics 2023

Selection and ordering data

P_N kW	n_2 rpm	T_2 Nm	i –	F_{R2} N	f_B –	m kg	Article No. (Article No. supplement, see below)	Additional identification code **-Z** with order code No. of poles
1.1	**FZ.29-LE90SM4P**							
	149	71	9.69	3380	2	18	**2KJ3301- ■ EK23- ■ ■ J1 -Z**	–
	167	63	8.63	3300	2.1	18	**2KJ3301- ■ EK23- ■ ■ H1 -Z**	–
	181	58	7.97	3250	2.1	18	**2KJ3301- ■ EK23- ■ ■ G1 -Z**	–
	206	51	6.98	3150	2.4	18	**2KJ3301- ■ EK23- ■ ■ F1 -Z**	–
	235	45	6.12	3050	2.6	18	**2KJ3301- ■ EK23- ■ ■ E1 -Z**	–
	259	40	5.55	2990	2.7	18	**2KJ3301- ■ EK23- ■ ■ D1 -Z**	–
	276	38	5.22	2940	2.8	18	**2KJ3301- ■ EK23- ■ ■ C1 -Z**	–
	313	34	4.60	2840	2.9	18	**2KJ3301- ■ EK23- ■ ■ B1 -Z**	–
	360	29	4.00	2740	3.1	18	**2KJ3301- ■ EK23- ■ ■ A1 -Z**	–
	FZ.29-LE80ZMJ2P							
	165	64	17.44	3390	2.4	16	**2KJ3301- ■ DM23- ■ ■ Q1 -Z**	**P00**
	189	56	15.29	3290	2.7	16	**2KJ3301- ■ DM23- ■ ■ P1 -Z**	**P00**
	208	50	13.88	3220	3	16	**2KJ3301- ■ DM23- ■ ■ N1 -Z**	**P00**
	221	48	13.06	3160	3.2	16	**2KJ3301- ■ DM23- ■ ■ M1 -Z**	**P00**
	251	42	11.51	3060	3.4	16	**2KJ3301- ■ DM23- ■ ■ L1 -Z**	**P00**
	289	36	9.99	2960	3.7	16	**2KJ3301- ■ DM23- ■ ■ K1 -Z**	**P00**
	298	35	9.69	2880	4.1	16	**2KJ3301- ■ DM23- ■ ■ J1 -Z**	**P00**
	334	31	8.63	2800	4.1	16	**2KJ3301- ■ DM23- ■ ■ H1 -Z**	**P00**
	362	29	7.97	2740	4.1	16	**2KJ3301- ■ DM23- ■ ■ G1 -Z**	**P00**
	413	25	6.98	2650	4.8	16	**2KJ3301- ■ DM23- ■ ■ F1 -Z**	**P00**
	471	22	6.12	2550	5.1	16	**2KJ3301- ■ DM23- ■ ■ E1 -Z**	**P00**
	520	20	5.55	2480	5.3	16	**2KJ3301- ■ DM23- ■ ■ D1 -Z**	**P00**
	553	19	5.22	2440	5.6	16	**2KJ3301- ■ DM23- ■ ■ C1 -Z**	**P00**
	627	17	4.60	2350	5.8	16	**2KJ3301- ■ DM23- ■ ■ B1 -Z**	**P00**
	721	15	4.00	2250	6.2	16	**2KJ3301- ■ DM23- ■ ■ A1 -Z**	**P00**
1.5	**FD.149-LE112ZMKA6P**							
	2.6	5530	377.00	65000	1.4	280	**2KJ3410- ■ GH23- ■ ■ W1 -Z**	**P01**
	3	4740	323.04	65000	1.7	280	**2KJ3410- ■ GH23- ■ ■ V1 -Z**	**P01**
	3.2	4460	304.03	65000	1.8	280	**2KJ3410- ■ GH23- ■ ■ U1 -Z**	**P01**
	3.4	4180	285.00	65000	1.9	280	**2KJ3410- ■ GH23- ■ ■ T1 -Z**	**P01**
	FD.129-LE112ZMKA6P							
	2.4	6060	413.00	36000	0.8	192	**2KJ3408- ■ GH23- ■ ■ T1 -Z**	**P01**
	2.6	5590	381.00	36400	0.87	192	**2KJ3408- ■ GH23- ■ ■ S1 -Z**	**P01**
	2.8	5150	351.00	36900	0.94	192	**2KJ3408- ■ GH23- ■ ■ R1 -Z**	**P01**
	3.3	4390	299.31	37500	1.1	192	**2KJ3408- ■ GH23- ■ ■ Q1 -Z**	**P01**
	FD.129-LE90ZLR4P							
	3.5	4090	413.00	37500	1.2	174	**2KJ3408- ■ EM23- ■ ■ T1 -Z**	–
	3.8	3770	381.00	37500	1.3	174	**2KJ3408- ■ EM23- ■ ■ S1 -Z**	–
	4.1	3480	351.00	37500	1.4	174	**2KJ3408- ■ EM23- ■ ■ R1 -Z**	–
	4.8	2960	299.31	37500	1.6	174	**2KJ3408- ■ EM23- ■ ■ Q1 -Z**	–
	5.1	2790	281.70	37500	1.7	174	**2KJ3408- ■ EM23- ■ ■ P1 -Z**	–
	5.5	2590	261.42	37500	1.9	174	**2KJ3408- ■ EM23- ■ ■ N1 -Z**	–
	6.3	2290	231.12	37500	2.1	174	**2KJ3408- ■ EM23- ■ ■ M1 -Z**	–
	FD.109-LE90ZLR4P							
	3.9	3660	370.00	25000	0.85	121	**2KJ3407- ■ EM23- ■ ■ S1 -Z**	–
	4.3	3320	335.70	25000	0.93	121	**2KJ3407- ■ EM23- ■ ■ R1 -Z**	–
	4.7	3070	309.87	25000	1	121	**2KJ3407- ■ EM23- ■ ■ Q1 -Z**	–
	5.1	2790	281.68	25000	1.1	121	**2KJ3407- ■ EM23- ■ ■ P1 -Z**	–
	6.1	2360	238.52	25000	1.3	121	**2KJ3407- ■ EM23- ■ ■ N1 -Z**	–
	6.4	2220	224.49	25000	1.4	121	**2KJ3407- ■ EM23- ■ ■ M1 -Z**	–

Article No. supplement		
Shaft design	**1 or 9**	see page 10/49
Frequency and voltage	**2 or 9**	see page 11/2
Gearbox mounting type	**A, F, H or D**	see page 10/42

© Innomotics 2023

Selection and ordering data

P_N kW	n_2 rpm	T_2 Nm	i –	F_{R2} N	f_B –	m kg	Article No. (Article No. supplement, see below)	Additional identification code **-Z** with order code No. of poles
1.5	**FD.109-LE90ZLR4P**							
	7	2050	207.31	25000	1.5	121	**2KJ3407- ■ EM23- ■ ■ L1 -Z**	–
	7.8	1820	184.46	25000	1.7	121	**2KJ3407- ■ EM23- ■ ■ K1 -Z**	–
	8.8	1620	163.83	25000	1.9	121	**2KJ3407- ■ EM23- ■ ■ J1 -Z**	–
	9.9	1450	146.65	25000	2.1	121	**2KJ3407- ■ EM23- ■ ■ H1 -Z**	–
	FD.89-LE90ZLR4P							
	6.5	2200	222.33	17400	0.84	81	**2KJ3406- ■ EM23- ■ ■ N1 -Z**	–
	7	2030	205.23	17400	0.91	81	**2KJ3406- ■ EM23- ■ ■ M1 -Z**	–
	7.7	1860	188.00	17400	0.99	81	**2KJ3406- ■ EM23- ■ ■ L1 -Z**	–
	9.2	1560	157.74	17400	1.2	81	**2KJ3406- ■ EM23- ■ ■ K1 -Z**	–
	9.7	1470	148.46	17400	1.3	81	**2KJ3406- ■ EM23- ■ ■ J1 -Z**	–
	11	1350	136.21	17400	1.4	81	**2KJ3406- ■ EM23- ■ ■ H1 -Z**	–
	12	1180	118.98	17400	1.6	81	**2KJ3406- ■ EM23- ■ ■ G1 -Z**	–
	14	1050	106.52	17400	1.8	81	**2KJ3406- ■ EM23- ■ ■ F1 -Z**	–
	16	920	93.14	17400	2	81	**2KJ3406- ■ EM23- ■ ■ E1 -Z**	–
	18	790	79.95	17400	2.3	81	**2KJ3406- ■ EM23- ■ ■ D1 -Z**	–
	FD.79-LE90ZLR4P							
	11	1250	126.54	13100	0.8	49	**2KJ3405- ■ EM23- ■ ■ H1 -Z**	–
	12	1180	119.10	13200	0.85	49	**2KJ3405- ■ EM23- ■ ■ G1 -Z**	–
	13	1110	112.48	13400	0.9	49	**2KJ3405- ■ EM23- ■ ■ F1 -Z**	–
	15	945	95.71	13700	1.1	49	**2KJ3405- ■ EM23- ■ ■ E1 -Z**	–
	18	810	81.99	13900	1.2	49	**2KJ3405- ■ EM23- ■ ■ D1 -Z**	–
	20	715	72.09	14100	1.4	49	**2KJ3405- ■ EM23- ■ ■ C1 -Z**	–
	24	600	60.82	14400	1.7	49	**2KJ3405- ■ EM23- ■ ■ B1 -Z**	–
	27	525	53.01	14500	1.9	49	**2KJ3405- ■ EM23- ■ ■ A1 -Z**	–
	FZ.79-LE90ZLR4P							
	27	530	53.55	14500	1.9	48	**2KJ3305- ■ EM23- ■ ■ X1 -Z**	–
	30	475	48.03	14500	2.1	48	**2KJ3305- ■ EM23- ■ ■ W1 -Z**	–
	33	425	43.18	14500	2.3	48	**2KJ3305- ■ EM23- ■ ■ V1 -Z**	–
	37	385	39.06	14500	2.6	48	**2KJ3305- ■ EM23- ■ ■ U1 -Z**	–
	FD.69-LE90ZLR4P							
	22	655	66.11	9410	0.92	40	**2KJ3404- ■ EM23- ■ ■ C1 -Z**	–
	25	560	56.67	9320	1.1	40	**2KJ3404- ■ EM23- ■ ■ B1 -Z**	–
	30	480	48.80	9200	1.2	40	**2KJ3404- ■ EM23- ■ ■ A1 -Z**	–
	FZ.69-LE90ZLR4P							
	22	640	64.67	9410	0.94	40	**2KJ3304- ■ EM23- ■ ■ X1 -Z**	–
	25	580	58.79	9360	1	40	**2KJ3304- ■ EM23- ■ ■ W1 -Z**	–
	29	495	50.00	9200	1.2	40	**2KJ3304- ■ EM23- ■ ■ V1 -Z**	–
	32	450	45.45	9100	1.3	40	**2KJ3304- ■ EM23- ■ ■ U1 -Z**	–
	36	400	40.56	8960	1.5	40	**2KJ3304- ■ EM23- ■ ■ T1 -Z**	–
	40	360	36.36	8800	1.7	40	**2KJ3304- ■ EM23- ■ ■ S1 -Z**	–
	44	325	32.78	8640	1.8	40	**2KJ3304- ■ EM23- ■ ■ R1 -Z**	–
	48	300	30.26	8520	2	40	**2KJ3304- ■ EM23- ■ ■ Q1 -Z**	–
	52	270	27.62	8390	2.2	40	**2KJ3304- ■ EM23- ■ ■ P1 -Z**	–
	63	225	22.92	8060	2.6	40	**2KJ3304- ■ EM23- ■ ■ N1 -Z**	–
	67	210	21.57	7970	2.8	40	**2KJ3304- ■ EM23- ■ ■ M1 -Z**	–
	71	200	20.37	7850	3	40	**2KJ3304- ■ EM23- ■ ■ L1 -Z**	–
	FD.49-LE90ZLR4P							
	27	530	53.83	6250	0.9	35	**2KJ3403- ■ EM23- ■ ■ B1 -Z**	–
	31	460	46.36	6240	1	35	**2KJ3403- ■ EM23- ■ ■ A1 -Z**	–
	FZ.49-LE90ZLR4P							
	26	550	55.85	6240	0.87	35	**2KJ3303- ■ EM23- ■ ■ W1 -Z**	–

Article No. supplement		
Shaft design	**1 or 9**	see page 10/49
Frequency and voltage	**2 or 9**	see page 11/2
Gearbox mounting type	**A, F, H or D**	see page 10/42

© Innomotics 2023

Selection and ordering data

P_N kW	n_2 rpm	T_2 Nm	i –	F_{R2} N	f_B –	m kg	Article No. (Article No. supplement, see below)	Additional identification code **-Z** with order code No. of poles
1.5	**FZ.49-LE90ZLR4P**							
	30	470	47.50	6250	1	35	**2KJ3303- ■ EM23- ■ ■ V1 -Z**	–
	33	425	43.18	6250	1.1	35	**2KJ3303- ■ EM23- ■ ■ U1 -Z**	–
	38	380	38.53	6210	1.3	35	**2KJ3303- ■ EM23- ■ ■ T1 -Z**	–
	42	340	34.55	6160	1.4	35	**2KJ3303- ■ EM23- ■ ■ S1 -Z**	–
	46	305	31.14	6100	1.6	35	**2KJ3303- ■ EM23- ■ ■ R1 -Z**	–
	50	285	28.74	6020	1.7	35	**2KJ3303- ■ EM23- ■ ■ Q1 -Z**	–
	55	260	26.24	5950	1.8	35	**2KJ3303- ■ EM23- ■ ■ P1 -Z**	–
	66	215	21.77	5780	2.2	35	**2KJ3303- ■ EM23- ■ ■ N1 -Z**	–
	71	200	20.49	5730	2.4	35	**2KJ3303- ■ EM23- ■ ■ M1 -Z**	–
	75	192	19.35	5650	2.5	35	**2KJ3303- ■ EM23- ■ ■ L1 -Z**	–
	88	163	16.47	5480	2.9	35	**2KJ3303- ■ EM23- ■ ■ K1 -Z**	–
	102	140	14.11	5300	3.4	35	**2KJ3303- ■ EM23- ■ ■ J1 -Z**	–
	FZ.39-LE90ZLR4P							
	45	315	31.82	5280	0.9	27	**2KJ3302- ■ EM23- ■ ■ T1 -Z**	–
	50	285	28.93	5260	0.96	27	**2KJ3302- ■ EM23- ■ ■ S1 -Z**	–
	57	250	25.34	5200	1.1	27	**2KJ3302- ■ EM23- ■ ■ R1 -Z**	–
	62	230	23.39	5170	1.1	27	**2KJ3302- ■ EM23- ■ ■ Q1 -Z**	–
	70	205	20.71	5080	1.2	27	**2KJ3302- ■ EM23- ■ ■ P1 -Z**	–
	84	171	17.24	4940	1.4	27	**2KJ3302- ■ EM23- ■ ■ N1 -Z**	–
	89	161	16.22	4890	1.4	27	**2KJ3302- ■ EM23- ■ ■ M1 -Z**	–
	99	144	14.54	4800	1.5	27	**2KJ3302- ■ EM23- ■ ■ L1 -Z**	–
	117	123	12.38	4650	1.7	27	**2KJ3302- ■ EM23- ■ ■ K1 -Z**	–
	136	105	10.61	4500	1.9	27	**2KJ3302- ■ EM23- ■ ■ J1 -Z**	–
	158	90	9.13	4360	2.1	27	**2KJ3302- ■ EM23- ■ ■ H1 -Z**	–
	178	80	8.10	4160	2.1	27	**2KJ3302- ■ EM23- ■ ■ G1 -Z**	–
	214	67	6.74	3990	2.3	27	**2KJ3302- ■ EM23- ■ ■ F1 -Z**	–
	228	63	6.35	3930	2.4	27	**2KJ3302- ■ EM23- ■ ■ E1 -Z**	–
	254	56	5.69	3830	2.5	27	**2KJ3302- ■ EM23- ■ ■ D1 -Z**	–
	299	48	4.84	3670	2.7	27	**2KJ3302- ■ EM23- ■ ■ C1 -Z**	–
	348	41	4.15	3520	2.9	27	**2KJ3302- ■ EM23- ■ ■ B1 -Z**	–
	405	35	3.57	3390	3.1	27	**2KJ3302- ■ EM23- ■ ■ A1 -Z**	–
	FZ.39-LE90SM2P							
	169	85	17.24	4290	2.8	24	**2KJ3302- ■ EK23- ■ ■ N1 -Z**	**P00**
	179	80	16.22	4230	2.9	24	**2KJ3302- ■ EK23- ■ ■ M1 -Z**	**P00**
	200	72	14.54	4110	3.1	24	**2KJ3302- ■ EK23- ■ ■ L1 -Z**	**P00**
	235	61	12.38	3950	3.4	24	**2KJ3302- ■ EK23- ■ ■ K1 -Z**	**P00**
	274	52	10.61	3800	3.8	24	**2KJ3302- ■ EK23- ■ ■ J1 -Z**	**P00**
	319	45	9.13	3650	4.2	24	**2KJ3302- ■ EK23- ■ ■ H1 -Z**	**P00**
	359	40	8.10	3490	4.2	24	**2KJ3302- ■ EK23- ■ ■ G1 -Z**	**P00**
	432	33	6.74	3320	4.6	24	**2KJ3302- ■ EK23- ■ ■ F1 -Z**	**P00**
	458	31	6.35	3270	4.8	24	**2KJ3302- ■ EK23- ■ ■ E1 -Z**	**P00**
	511	28	5.69	3170	5	24	**2KJ3302- ■ EK23- ■ ■ D1 -Z**	**P00**
	601	24	4.84	3020	5.4	24	**2KJ3302- ■ EK23- ■ ■ C1 -Z**	**P00**
	701	20	4.15	2890	5.8	24	**2KJ3302- ■ EK23- ■ ■ B1 -Z**	**P00**
	815	18	3.57	2760	6.1	24	**2KJ3302- ■ EK23- ■ ■ A1 -Z**	**P00**
	FZ.29-LE90ZLR4P							
	83	173	17.44	3500	0.87	21	**2KJ3301- ■ EM23- ■ ■ Q1 -Z**	–
	95	152	15.29	3460	0.99	21	**2KJ3301- ■ EM23- ■ ■ P1 -Z**	–
	104	138	13.88	3430	1.1	21	**2KJ3301- ■ EM23- ■ ■ N1 -Z**	–
	111	129	13.06	3410	1.2	21	**2KJ3301- ■ EM23- ■ ■ M1 -Z**	–

Article No. supplement		
Shaft design	**1 or 9**	see page 10/49
Frequency and voltage	**2 or 9**	see page 11/2
Gearbox mounting type	**A, F, H or D**	see page 10/42

© Innomotics 2023

Selection and ordering data

P_N kW	n_2 rpm	T_2 Nm	i –	F_{R2} N	f_B –	m kg	Article No. (Article No. supplement, see below)	Additional identification code **-Z** with order code No. of poles
1.5	**FZ.29-LE90ZLR4P**							
	126	114	11.51	3350	1.3	21	**2KJ3301- ■ EM23- ■ ■ L1 -Z**	–
	145	99	9.99	3280	1.4	21	**2KJ3301- ■ EM23- ■ ■ K1 -Z**	–
	149	96	9.69	3130	1.5	21	**2KJ3301- ■ EM23- ■ ■ J1 -Z**	–
	167	86	8.63	3070	1.5	21	**2KJ3301- ■ EM23- ■ ■ H1 -Z**	–
	181	79	7.97	3040	1.5	21	**2KJ3301- ■ EM23- ■ ■ G1 -Z**	–
	207	69	6.98	2970	1.8	21	**2KJ3301- ■ EM23- ■ ■ F1 -Z**	–
	236	61	6.12	2890	1.9	21	**2KJ3301- ■ EM23- ■ ■ E1 -Z**	–
	260	55	5.55	2840	2	21	**2KJ3301- ■ EM23- ■ ■ D1 -Z**	–
	277	52	5.22	2800	2	21	**2KJ3301- ■ EM23- ■ ■ C1 -Z**	–
	314	46	4.60	2720	2.1	21	**2KJ3301- ■ EM23- ■ ■ B1 -Z**	–
	361	40	4.00	2630	2.3	21	**2KJ3301- ■ EM23- ■ ■ A1 -Z**	–
	FZ.29-LE90SM2P							
	167	86	17.44	3200	1.7	18	**2KJ3301- ■ EK23- ■ ■ Q1 -Z**	**P00**
	190	75	15.29	3120	2	18	**2KJ3301- ■ EK23- ■ ■ P1 -Z**	**P00**
	210	68	13.88	3060	2.2	18	**2KJ3301- ■ EK23- ■ ■ N1 -Z**	**P00**
	223	64	13.06	3020	2.3	18	**2KJ3301- ■ EK23- ■ ■ M1 -Z**	**P00**
	253	57	11.51	2930	2.5	18	**2KJ3301- ■ EK23- ■ ■ L1 -Z**	**P00**
	291	49	9.99	2840	2.8	18	**2KJ3301- ■ EK23- ■ ■ K1 -Z**	**P00**
	300	48	9.69	2750	3	18	**2KJ3301- ■ EK23- ■ ■ J1 -Z**	**P00**
	337	42	8.63	2690	3.1	18	**2KJ3301- ■ EK23- ■ ■ H1 -Z**	**P00**
	365	39	7.97	2630	3.1	18	**2KJ3301- ■ EK23- ■ ■ G1 -Z**	**P00**
	417	34	6.98	2550	3.6	18	**2KJ3301- ■ EK23- ■ ■ F1 -Z**	**P00**
	475	30	6.12	2470	3.8	18	**2KJ3301- ■ EK23- ■ ■ E1 -Z**	**P00**
	524	27	5.55	2410	4	18	**2KJ3301- ■ EK23- ■ ■ D1 -Z**	**P00**
	557	26	5.22	2360	4.1	18	**2KJ3301- ■ EK23- ■ ■ C1 -Z**	**P00**
	633	23	4.60	2280	4.3	18	**2KJ3301- ■ EK23- ■ ■ B1 -Z**	**P00**
	728	20	4.00	2200	4.6	18	**2KJ3301- ■ EK23- ■ ■ A1 -Z**	**P00**
2.2	**FD.169-LE132SQA6P**							
	2.6	7930	368.00	73500	1.7	455	**2KJ3411- ■ HG23- ■ ■ V1 -Z**	**P01**
	2.8	7390	343.01	73500	1.8	455	**2KJ3411- ■ HG23- ■ ■ U1 -Z**	**P01**
	FD.149-LE132SQA6P							
	2.6	8120	377.00	65000	0.98	308	**2KJ3410- ■ HG23- ■ ■ W1 -Z**	**P01**
	3	6960	323.04	65000	1.1	308	**2KJ3410- ■ HG23- ■ ■ V1 -Z**	**P01**
	3.2	6550	304.03	65000	1.2	308	**2KJ3410- ■ HG23- ■ ■ U1 -Z**	**P01**
	3.4	6140	285.00	65000	1.3	308	**2KJ3410- ■ HG23- ■ ■ T1 -Z**	**P01**
	FD.149-LE100ZLSA4P							
	3.9	5400	377.00	65000	1.5	278	**2KJ3410- ■ FN23- ■ ■ W1 -Z**	–
	4.5	4630	323.04	65000	1.7	278	**2KJ3410- ■ FN23- ■ ■ V1 -Z**	–
	4.8	4360	304.03	65000	1.8	278	**2KJ3410- ■ FN23- ■ ■ U1 -Z**	–
	5.1	4080	285.00	65000	2	278	**2KJ3410- ■ FN23- ■ ■ T1 -Z**	–
	FD.129-LE100ZLSA4P							
	3.5	5920	413.00	36100	0.82	191	**2KJ3408- ■ FN23- ■ ■ T1 -Z**	–
	3.8	5460	381.00	36600	0.89	191	**2KJ3408- ■ FN23- ■ ■ S1 -Z**	–
	4.2	5030	351.00	37000	0.96	191	**2KJ3408- ■ FN23- ■ ■ R1 -Z**	–
	4.9	4290	299.31	37500	1.1	191	**2KJ3408- ■ FN23- ■ ■ Q1 -Z**	–
	5.2	4040	281.70	37500	1.2	191	**2KJ3408- ■ FN23- ■ ■ P1 -Z**	–
	5.6	3740	261.42	37500	1.3	191	**2KJ3408- ■ FN23- ■ ■ N1 -Z**	–
	6.3	3310	231.12	37500	1.5	191	**2KJ3408- ■ FN23- ■ ■ M1 -Z**	–
	7.1	2950	206.32	37500	1.6	191	**2KJ3408- ■ FN23- ■ ■ L1 -Z**	–
	7.9	2660	185.66	37500	1.8	191	**2KJ3408- ■ FN23- ■ ■ K1 -Z**	–
	9.1	2310	161.14	37500	2.1	191	**2KJ3408- ■ FN23- ■ ■ J1 -Z**	–

Article No. supplement		
Shaft design	**1 or 9**	see page 10/49
Frequency and voltage	**2 or 9**	see page 11/2
Gearbox mounting type	**A, F, H or D**	see page 10/42

© Innomotics 2023

Selection and ordering data

P_N kW	n_2 rpm	T_2 Nm	i –	F_{R2} N	f_B –	m kg	Article No. (Article No. supplement, see below)	Additional identification code **-Z** with order code No. of poles
2.2	**FD.109-LE100ZLSA4P**							
	6.1	3420	238.52	25000	0.91	137	**2KJ3407- ■ FN23- ■ ■ N1 -Z**	–
	6.5	3210	224.49	25000	0.96	137	**2KJ3407- ■ FN23- ■ ■ M1 -Z**	–
	7.1	2970	207.31	25000	1	137	**2KJ3407- ■ FN23- ■ ■ L1 -Z**	–
	7.9	2640	184.46	25000	1.2	137	**2KJ3407- ■ FN23- ■ ■ K1 -Z**	–
	8.9	2350	163.83	25000	1.3	137	**2KJ3407- ■ FN23- ■ ■ J1 -Z**	–
	10	2100	146.65	25000	1.5	137	**2KJ3407- ■ FN23- ■ ■ H1 -Z**	–
	12	1790	125.37	25000	1.7	137	**2KJ3407- ■ FN23- ■ ■ G1 -Z**	–
	13	1600	111.95	25000	1.9	137	**2KJ3407- ■ FN23- ■ ■ F1 -Z**	–
	15	1410	98.94	25000	2.2	137	**2KJ3407- ■ FN23- ■ ■ E1 -Z**	–
	FD.89-LE100ZLSA4P							
	9.3	2260	157.74	17400	0.82	96	**2KJ3406- ■ FN23- ■ ■ K1 -Z**	–
	9.9	2120	148.46	17400	0.87	96	**2KJ3406- ■ FN23- ■ ■ J1 -Z**	–
	11	1950	136.21	17400	0.95	96	**2KJ3406- ■ FN23- ■ ■ H1 -Z**	–
	12	1700	118.98	17400	1.1	96	**2KJ3406- ■ FN23- ■ ■ G1 -Z**	–
	14	1520	106.52	17400	1.2	96	**2KJ3406- ■ FN23- ■ ■ F1 -Z**	–
	16	1330	93.14	17400	1.4	96	**2KJ3406- ■ FN23- ■ ■ E1 -Z**	–
	18	1140	79.95	17400	1.6	96	**2KJ3406- ■ FN23- ■ ■ D1 -Z**	–
	21	1010	70.67	17400	1.8	96	**2KJ3406- ■ FN23- ■ ■ C1 -Z**	–
	24	860	60.09	17400	2.1	96	**2KJ3406- ■ FN23- ■ ■ B1 -Z**	–
	28	735	51.51	17400	2.5	96	**2KJ3406- ■ FN23- ■ ■ A1 -Z**	–
	FZ.89-LE100ZLSA4P							
	24	885	61.72	17400	2.1	95	**2KJ3306- ■ FN23- ■ ■ B2 -Z**	–
	26	795	55.72	17400	2.3	95	**2KJ3306- ■ FN23- ■ ■ A2 -Z**	–
	FD.79-LE100ZLSA4P							
	18	1170	81.99	13200	0.85	65	**2KJ3405- ■ FN23- ■ ■ D1 -Z**	–
	20	1030	72.09	13500	0.97	65	**2KJ3405- ■ FN23- ■ ■ C1 -Z**	–
	24	870	60.82	13800	1.1	65	**2KJ3405- ■ FN23- ■ ■ B1 -Z**	–
	28	760	53.01	14000	1.3	65	**2KJ3405- ■ FN23- ■ ■ A1 -Z**	–
	FZ.79-LE100ZLSA4P							
	31	685	48.03	14200	1.5	64	**2KJ3305- ■ FN23- ■ ■ W1 -Z**	–
	34	615	43.18	14300	1.6	64	**2KJ3305- ■ FN23- ■ ■ V1 -Z**	–
	38	560	39.06	14400	1.8	64	**2KJ3305- ■ FN23- ■ ■ U1 -Z**	–
	41	515	36.05	14500	1.9	64	**2KJ3305- ■ FN23- ■ ■ T1 -Z**	–
	44	470	33.02	14500	2.1	64	**2KJ3305- ■ FN23- ■ ■ S1 -Z**	–
	53	395	27.71	14500	2.5	64	**2KJ3305- ■ FN23- ■ ■ R1 -Z**	–
	56	370	26.08	14500	2.7	64	**2KJ3305- ■ FN23- ■ ■ Q1 -Z**	–
	61	340	23.93	14500	2.9	64	**2KJ3305- ■ FN23- ■ ■ P1 -Z**	–
	FD.69-LE100ZLSA4P							
	30	700	48.80	7780	0.86	58	**2KJ3404- ■ FN23- ■ ■ A1 -Z**	–
	FZ.69-LE100ZLSA4P							
	36	580	40.56	7800	1	57	**2KJ3304- ■ FN23- ■ ■ T1 -Z**	–
	40	520	36.36	7760	1.2	57	**2KJ3304- ■ FN23- ■ ■ S1 -Z**	–
	45	470	32.78	7700	1.3	57	**2KJ3304- ■ FN23- ■ ■ R1 -Z**	–
	48	430	30.26	7670	1.4	57	**2KJ3304- ■ FN23- ■ ■ Q1 -Z**	–
	53	395	27.62	7570	1.5	57	**2KJ3304- ■ FN23- ■ ■ P1 -Z**	–
	64	325	22.92	7400	1.8	57	**2KJ3304- ■ FN23- ■ ■ N1 -Z**	–
	68	305	21.57	7340	1.9	57	**2KJ3304- ■ FN23- ■ ■ M1 -Z**	–
	72	290	20.37	7260	2.1	57	**2KJ3304- ■ FN23- ■ ■ L1 -Z**	–
	85	245	17.33	7060	2.4	57	**2KJ3304- ■ FN23- ■ ■ K1 -Z**	–
	99	210	14.85	6840	2.8	57	**2KJ3304- ■ FN23- ■ ■ J1 -Z**	–

Article No. supplement		
Shaft design	**1 or 9**	see page 10/49
Frequency and voltage	**2 or 9**	see page 11/2
Gearbox mounting type	**A, F, H or D**	see page 10/42

© Innomotics 2023

Selection and ordering data

P_N kW	n_2 rpm	T_2 Nm	i –	F_{R2} N	f_B –	m kg	Article No. (Article No. supplement, see below)	Additional identification code **-Z** with order code No. of poles
2.2	**FZ.69-LE100ZLSA4P**							
	112	187	13.06	6640	3.2	57	**2KJ3304- ■ FN23- ■ ■ H1 -Z**	–
	133	158	11.01	6390	3.8	57	**2KJ3304- ■ FN23- ■ ■ G1 -Z**	–
	165	128	8.90	6030	3.7	57	**2KJ3304- ■ FN23- ■ ■ E1 -Z**	–
	192	109	7.62	5810	4.3	57	**2KJ3304- ■ FN23- ■ ■ D1 -Z**	–
	FZ.49-LE100ZLSA4P							
	38	550	38.53	5050	0.87	53	**2KJ3303- ■ FN23- ■ ■ T1 -Z**	–
	42	495	34.55	5110	0.97	53	**2KJ3303- ■ FN23- ■ ■ S1 -Z**	–
	47	445	31.14	5150	1.1	53	**2KJ3303- ■ FN23- ■ ■ R1 -Z**	–
	51	410	28.74	5160	1.2	53	**2KJ3303- ■ FN23- ■ ■ Q1 -Z**	–
	56	375	26.24	5160	1.3	53	**2KJ3303- ■ FN23- ■ ■ P1 -Z**	–
	67	310	21.77	5120	1.5	53	**2KJ3303- ■ FN23- ■ ■ N1 -Z**	–
	71	290	20.49	5110	1.6	53	**2KJ3303- ■ FN23- ■ ■ M1 -Z**	–
	76	275	19.35	5080	1.7	53	**2KJ3303- ■ FN23- ■ ■ L1 -Z**	–
	89	235	16.47	4980	2	53	**2KJ3303- ■ FN23- ■ ■ K1 -Z**	–
	104	200	14.11	4880	2.4	53	**2KJ3303- ■ FN23- ■ ■ J1 -Z**	–
	118	178	12.40	4760	2.7	53	**2KJ3303- ■ FN23- ■ ■ H1 -Z**	–
	140	150	10.46	4620	3.2	53	**2KJ3303- ■ FN23- ■ ■ G1 -Z**	–
	161	131	9.12	4490	3.7	53	**2KJ3303- ■ FN23- ■ ■ F1 -Z**	–
	174	120	8.40	4330	3.7	53	**2KJ3303- ■ FN23- ■ ■ E1 -Z**	–
	203	103	7.20	4190	4.4	53	**2KJ3303- ■ FN23- ■ ■ D1 -Z**	–
	FZ.49-LE90ZLR2P							
	150	140	19.35	4550	3.4	35	**2KJ3303- ■ EM23- ■ ■ L1 -Z**	**P00**
	177	119	16.47	4400	4	35	**2KJ3303- ■ EM23- ■ ■ K1 -Z**	**P00**
	FZ.39-LE100ZLSA4P							
	71	295	20.71	4380	0.84	42	**2KJ3302- ■ FN23- ■ ■ P1 -Z**	–
	85	245	17.24	4360	0.95	42	**2KJ3302- ■ FN23- ■ ■ N1 -Z**	–
	90	230	16.22	4350	0.99	42	**2KJ3302- ■ FN23- ■ ■ M1 -Z**	–
	101	205	14.54	4320	1.1	42	**2KJ3302- ■ FN23- ■ ■ L1 -Z**	–
	118	178	12.38	4210	1.2	42	**2KJ3302- ■ FN23- ■ ■ K1 -Z**	–
	138	152	10.61	4130	1.3	42	**2KJ3302- ■ FN23- ■ ■ J1 -Z**	–
	160	131	9.13	4030	1.4	42	**2KJ3302- ■ FN23- ■ ■ H1 -Z**	–
	181	116	8.10	3840	1.4	42	**2KJ3302- ■ FN23- ■ ■ G1 -Z**	–
	217	97	6.74	3720	1.6	42	**2KJ3302- ■ FN23- ■ ■ F1 -Z**	–
	231	91	6.35	3670	1.6	42	**2KJ3302- ■ FN23- ■ ■ E1 -Z**	–
	257	82	5.69	3590	1.7	42	**2KJ3302- ■ FN23- ■ ■ D1 -Z**	–
	303	69	4.84	3480	1.8	42	**2KJ3302- ■ FN23- ■ ■ C1 -Z**	–
	353	60	4.15	3350	2	42	**2KJ3302- ■ FN23- ■ ■ B1 -Z**	–
	410	51	3.57	3240	2.1	42	**2KJ3302- ■ FN23- ■ ■ A1 -Z**	–
	FZ.39-LE90ZLR2P							
	169	124	17.24	4000	1.9	27	**2KJ3302- ■ EM23- ■ ■ N1 -Z**	**P00**
	179	117	16.22	3950	2	27	**2KJ3302- ■ EM23- ■ ■ M1 -Z**	**P00**
	200	105	14.54	3870	2.1	27	**2KJ3302- ■ EM23- ■ ■ L1 -Z**	**P00**
	235	89	12.38	3740	2.3	27	**2KJ3302- ■ EM23- ■ ■ K1 -Z**	**P00**
	274	77	10.61	3610	2.6	27	**2KJ3302- ■ EM23- ■ ■ J1 -Z**	**P00**
	319	66	9.13	3490	2.9	27	**2KJ3302- ■ EM23- ■ ■ H1 -Z**	**P00**
	359	58	8.10	3340	2.9	27	**2KJ3302- ■ EM23- ■ ■ G1 -Z**	**P00**
	432	49	6.74	3190	3.1	27	**2KJ3302- ■ EM23- ■ ■ F1 -Z**	**P00**
	458	46	6.35	3140	3.2	27	**2KJ3302- ■ EM23- ■ ■ E1 -Z**	**P00**
	511	41	5.69	3060	3.4	27	**2KJ3302- ■ EM23- ■ ■ D1 -Z**	**P00**
	601	35	4.84	2930	3.7	27	**2KJ3302- ■ EM23- ■ ■ C1 -Z**	**P00**

Article No. supplement		
Shaft design	**1 or 9**	see page 10/49
Frequency and voltage	**2 or 9**	see page 11/2
Gearbox mounting type	**A, F, H or D**	see page 10/42

© Innomotics 2023

Selection and ordering data

P_N kW	n_2 rpm	T_2 Nm	i –	F_{R2} N	f_B –	m kg	Article No. (Article No. supplement, see below)	Additional identification code **-Z** with order code No. of poles
2.2	**FZ.39-LE90ZLR2P**							
	701	30	4.15	2810	3.9	27	**2KJ3302- ■ EM23- ■ ■ B1 -Z**	**P00**
	815	26	3.57	2690	4.2	27	**2KJ3302- ■ EM23- ■ ■ A1 -Z**	**P00**
	FZ.29-LE100ZLSA4P							
	112	187	13.06	2910	0.8	35	**2KJ3301- ■ FN23- ■ ■ M1 -Z**	–
	127	165	11.51	2910	0.87	35	**2KJ3301- ■ FN23- ■ ■ L1 -Z**	–
	147	143	9.99	2890	0.95	35	**2KJ3301- ■ FN23- ■ ■ K1 -Z**	–
	151	139	9.69	2690	1	35	**2KJ3301- ■ FN23- ■ ■ J1 -Z**	–
	170	124	8.63	2690	1.1	35	**2KJ3301- ■ FN23- ■ ■ H1 -Z**	–
	184	114	7.97	2680	1	35	**2KJ3301- ■ FN23- ■ ■ G1 -Z**	–
	210	100	6.98	2650	1.2	35	**2KJ3301- ■ FN23- ■ ■ F1 -Z**	–
	239	88	6.12	2610	1.3	35	**2KJ3301- ■ FN23- ■ ■ E1 -Z**	–
	264	80	5.55	2580	1.4	35	**2KJ3301- ■ FN23- ■ ■ D1 -Z**	–
	281	75	5.22	2560	1.4	35	**2KJ3301- ■ FN23- ■ ■ C1 -Z**	–
	318	66	4.60	2510	1.5	35	**2KJ3301- ■ FN23- ■ ■ B1 -Z**	–
	366	57	4.00	2450	1.6	35	**2KJ3301- ■ FN23- ■ ■ A1 -Z**	–
	FZ.29-LE90ZLR2P							
	167	126	17.44	2860	1.2	21	**2KJ3301- ■ EM23- ■ ■ Q1 -Z**	**P00**
	190	110	15.29	2830	1.4	21	**2KJ3301- ■ EM23- ■ ■ P1 -Z**	**P00**
	210	100	13.88	2790	1.5	21	**2KJ3301- ■ EM23- ■ ■ N1 -Z**	**P00**
	223	94	13.06	2770	1.6	21	**2KJ3301- ■ EM23- ■ ■ M1 -Z**	**P00**
	253	83	11.51	2710	1.7	21	**2KJ3301- ■ EM23- ■ ■ L1 -Z**	**P00**
	291	72	9.99	2650	1.9	21	**2KJ3301- ■ EM23- ■ ■ K1 -Z**	**P00**
	300	70	9.69	2530	2	21	**2KJ3301- ■ EM23- ■ ■ J1 -Z**	**P00**
	337	62	8.63	2490	2.1	21	**2KJ3301- ■ EM23- ■ ■ H1 -Z**	**P00**
	365	58	7.97	2450	2.1	21	**2KJ3301- ■ EM23- ■ ■ G1 -Z**	**P00**
	417	50	6.98	2390	2.4	21	**2KJ3301- ■ EM23- ■ ■ F1 -Z**	**P00**
	475	44	6.12	2330	2.6	21	**2KJ3301- ■ EM23- ■ ■ E1 -Z**	**P00**
	524	40	5.55	2280	2.7	21	**2KJ3301- ■ EM23- ■ ■ D1 -Z**	**P00**
	557	38	5.22	2250	2.8	21	**2KJ3301- ■ EM23- ■ ■ C1 -Z**	**P00**
	633	33	4.60	2190	2.9	21	**2KJ3301- ■ EM23- ■ ■ B1 -Z**	**P00**
	728	29	4.00	2110	3.2	21	**2KJ3301- ■ EM23- ■ ■ A1 -Z**	**P00**
3	**FD.189-LE132SQB6P**							
	2.8	10200	347.35	110900	1.9	665	**2KJ3412- ■ HH23- ■ ■ T1 -Z**	**P01**
	FD.169-LE132SQB6P							
	2.6	10800	368.00	73500	1.3	453	**2KJ3411- ■ HH23- ■ ■ V1 -Z**	**P01**
	2.8	10000	343.01	73500	1.3	453	**2KJ3411- ■ HH23- ■ ■ U1 -Z**	**P01**
	3.2	8960	304.94	73500	1.5	453	**2KJ3411- ■ HH23- ■ ■ T1 -Z**	**P01**
	3.6	8040	273.80	73500	1.7	453	**2KJ3411- ■ HH23- ■ ■ S1 -Z**	**P01**
	FD.149-LE132SQB6P							
	3	9490	323.04	65000	0.84	306	**2KJ3410- ■ HH23- ■ ■ V1 -Z**	**P01**
	3.2	8930	304.03	65000	0.9	306	**2KJ3410- ■ HH23- ■ ■ U1 -Z**	**P01**
	3.4	8370	285.00	65000	0.96	306	**2KJ3410- ■ HH23- ■ ■ T1 -Z**	**P01**
	FD.149-LE100ZLSB4P							
	3.9	7390	377.00	65000	1.1	278	**2KJ3410- ■ FP23- ■ ■ W1 -Z**	–
	4.5	6330	323.04	65000	1.3	278	**2KJ3410- ■ FP23- ■ ■ V1 -Z**	–
	4.8	5960	304.03	65000	1.3	278	**2KJ3410- ■ FP23- ■ ■ U1 -Z**	–
	5.1	5590	285.00	65000	1.4	278	**2KJ3410- ■ FP23- ■ ■ T1 -Z**	–
	5.8	4950	252.64	65000	1.6	278	**2KJ3410- ■ FP23- ■ ■ S1 -Z**	–
	6.5	4400	224.42	65000	1.8	278	**2KJ3410- ■ FP23- ■ ■ R1 -Z**	–
	7.2	3970	202.50	65000	2	278	**2KJ3410- ■ FP23- ■ ■ Q1 -Z**	–

Article No. supplement		
Shaft design	**1 or 9**	see page 10/49
Frequency and voltage	**2 or 9**	see page 11/2
Gearbox mounting type	**A, F, H or D**	see page 10/42

© Innomotics 2023

Selection and ordering data

P_N kW	n_2 rpm	T_2 Nm	i –	F_{R2} N	f_B –	m kg	Article No. (Article No. supplement, see below)	Additional identification code **-Z** with order code No. of poles
3	**FD.129-LE100ZLSB4P**							
	4.9	5870	299.31	36200	0.83	191	**2KJ3408- ■ FP23- ■ ■ Q1 -Z**	–
	5.2	5520	281.70	36500	0.88	191	**2KJ3408- ■ FP23- ■ ■ P1 -Z**	–
	5.6	5130	261.42	36900	0.95	191	**2KJ3408- ■ FP23- ■ ■ N1 -Z**	–
	6.3	4530	231.12	37500	1.1	191	**2KJ3408- ■ FP23- ■ ■ M1 -Z**	–
	7.1	4040	206.32	37500	1.2	191	**2KJ3408- ■ FP23- ■ ■ L1 -Z**	–
	7.9	3640	185.66	37500	1.3	191	**2KJ3408- ■ FP23- ■ ■ K1 -Z**	–
	9.1	3160	161.14	37500	1.5	191	**2KJ3408- ■ FP23- ■ ■ J1 -Z**	–
	10	2840	144.92	37500	1.7	191	**2KJ3408- ■ FP23- ■ ■ H1 -Z**	–
	12	2480	126.66	37500	2	191	**2KJ3408- ■ FP23- ■ ■ G1 -Z**	–
	13	2210	113.03	37500	2.2	191	**2KJ3408- ■ FP23- ■ ■ F1 -Z**	–
	FD.109-LE100ZLSB4P							
	7.9	3620	184.46	25000	0.86	137	**2KJ3407- ■ FP23- ■ ■ K1 -Z**	–
	8.9	3210	163.83	25000	0.96	137	**2KJ3407- ■ FP23- ■ ■ J1 -Z**	–
	10	2870	146.65	25000	1.1	137	**2KJ3407- ■ FP23- ■ ■ H1 -Z**	–
	12	2460	125.37	25000	1.3	137	**2KJ3407- ■ FP23- ■ ■ G1 -Z**	–
	13	2190	111.95	25000	1.4	137	**2KJ3407- ■ FP23- ■ ■ F1 -Z**	–
	15	1940	98.94	25000	1.6	137	**2KJ3407- ■ FP23- ■ ■ E1 -Z**	–
	17	1700	86.83	25000	1.8	137	**2KJ3407- ■ FP23- ■ ■ D1 -Z**	–
	19	1480	75.59	25000	2.1	137	**2KJ3407- ■ FP23- ■ ■ C1 -Z**	–
	23	1260	64.62	25000	2.4	137	**2KJ3407- ■ FP23- ■ ■ B1 -Z**	–
	21	1380	70.74	25000	2.2	134	**2KJ3307- ■ FP23- ■ ■ B2 -Z**	–
	22	1280	65.30	25000	2.4	134	**2KJ3307- ■ FP23- ■ ■ A2 -Z**	–
	FD.89-LE100ZLSB4P							
	14	2090	106.52	17400	0.89	96	**2KJ3406- ■ FP23- ■ ■ F1 -Z**	–
	16	1820	93.14	17400	1	96	**2KJ3406- ■ FP23- ■ ■ E1 -Z**	–
	18	1560	79.95	17400	1.2	96	**2KJ3406- ■ FP23- ■ ■ D1 -Z**	–
	21	1380	70.67	17400	1.3	96	**2KJ3406- ■ FP23- ■ ■ C1 -Z**	–
	24	1170	60.09	17400	1.6	96	**2KJ3406- ■ FP23- ■ ■ B1 -Z**	–
	28	1010	51.51	17400	1.8	96	**2KJ3406- ■ FP23- ■ ■ A1 -Z**	–
	FZ.89-LE100ZLSB4P							
	24	1210	61.72	17400	1.5	95	**2KJ3306- ■ FP23- ■ ■ B2 -Z**	–
	26	1090	55.72	17400	1.7	95	**2KJ3306- ■ FP23- ■ ■ A2 -Z**	–
	29	990	50.54	17400	1.9	95	**2KJ3306- ■ FP23- ■ ■ X1 -Z**	–
	31	915	46.66	17400	2	95	**2KJ3306- ■ FP23- ■ ■ W1 -Z**	–
	34	830	42.41	17400	2.2	95	**2KJ3306- ■ FP23- ■ ■ V1 -Z**	–
	41	705	35.91	17400	2.6	95	**2KJ3306- ■ FP23- ■ ■ U1 -Z**	–
	FD.79-LE100ZLSB4P							
	24	1190	60.82	13200	0.84	65	**2KJ3405- ■ FP23- ■ ■ B1 -Z**	–
	28	1040	53.01	13500	0.96	65	**2KJ3405- ■ FP23- ■ ■ A1 -Z**	–
	FZ.79-LE100ZLSB4P							
	30	940	48.03	13700	1.1	64	**2KJ3305- ■ FP23- ■ ■ W1 -Z**	–
	34	845	43.18	13900	1.2	64	**2KJ3305- ■ FP23- ■ ■ V1 -Z**	–
	37	765	39.06	14000	1.3	64	**2KJ3305- ■ FP23- ■ ■ U1 -Z**	–
	40	705	36.05	14200	1.4	64	**2KJ3305- ■ FP23- ■ ■ T1 -Z**	–
	44	645	33.02	14300	1.5	64	**2KJ3305- ■ FP23- ■ ■ S1 -Z**	–
	53	540	27.71	14500	1.8	64	**2KJ3305- ■ FP23- ■ ■ R1 -Z**	–
	56	510	26.08	14500	2	64	**2KJ3305- ■ FP23- ■ ■ Q1 -Z**	–
	61	470	23.93	14500	2.1	64	**2KJ3305- ■ FP23- ■ ■ P1 -Z**	–
	70	410	20.90	14500	2.4	64	**2KJ3305- ■ FP23- ■ ■ N1 -Z**	–
	78	365	18.71	14500	2.7	64	**2KJ3305- ■ FP23- ■ ■ M1 -Z**	–
	89	320	16.36	14500	3.1	64	**2KJ3305- ■ FP23- ■ ■ L1 -Z**	–

Article No. supplement		
Shaft design	**1 or 9**	see page 10/49
Frequency and voltage	**2 or 9**	see page 11/2
Gearbox mounting type	**A, F, H or D**	see page 10/42

© Innomotics 2023

Selection and ordering data

P_N kW	n_2 rpm	T_2 Nm	i –	F_{R2} N	f_B –	m kg	Article No. (Article No. supplement, see below)	Additional identification code **-Z** with order code No. of poles
3	**FZ.69-LE100ZLSB4P**							
	40	710	36.36	6600	0.84	57	**2KJ3304- ■ FP23- ■ ■ S1 -Z**	–
	45	640	32.78	6660	0.93	57	**2KJ3304- ■ FP23- ■ ■ R1 -Z**	–
	48	590	30.26	6690	1	57	**2KJ3304- ■ FP23- ■ ■ Q1 -Z**	–
	53	540	27.62	6690	1.1	57	**2KJ3304- ■ FP23- ■ ■ P1 -Z**	–
	64	450	22.92	6640	1.3	57	**2KJ3304- ■ FP23- ■ ■ N1 -Z**	–
	68	420	21.57	6640	1.4	57	**2KJ3304- ■ FP23- ■ ■ M1 -Z**	–
	72	400	20.37	6590	1.5	57	**2KJ3304- ■ FP23- ■ ■ L1 -Z**	–
	84	340	17.33	6480	1.8	57	**2KJ3304- ■ FP23- ■ ■ K1 -Z**	–
	98	290	14.85	6360	2.1	57	**2KJ3304- ■ FP23- ■ ■ J1 -Z**	–
	112	255	13.06	6230	2.3	57	**2KJ3304- ■ FP23- ■ ■ H1 -Z**	–
	133	215	11.01	6050	2.8	57	**2KJ3304- ■ FP23- ■ ■ G1 -Z**	–
	152	188	9.60	5890	3.2	57	**2KJ3304- ■ FP23- ■ ■ F1 -Z**	–
	164	175	8.90	5730	2.7	57	**2KJ3304- ■ FP23- ■ ■ E1 -Z**	–
	192	150	7.62	5550	3.1	57	**2KJ3304- ■ FP23- ■ ■ D1 -Z**	–
	218	131	6.70	5400	3.3	57	**2KJ3304- ■ FP23- ■ ■ C1 -Z**	–
	258	111	5.66	5190	3.7	57	**2KJ3304- ■ FP23- ■ ■ B1 -Z**	–
	296	97	4.93	5010	4	57	**2KJ3304- ■ FP23- ■ ■ A1 -Z**	–
	FZ.49-LE100ZLSB4P							
	51	560	28.74	4190	0.85	53	**2KJ3303- ■ FP23- ■ ■ Q1 -Z**	–
	56	515	26.24	4250	0.93	53	**2KJ3303- ■ FP23- ■ ■ P1 -Z**	–
	67	425	21.77	4380	1.1	53	**2KJ3303- ■ FP23- ■ ■ N1 -Z**	–
	71	400	20.49	4400	1.2	53	**2KJ3303- ■ FP23- ■ ■ M1 -Z**	–
	75	380	19.35	4400	1.3	53	**2KJ3303- ■ FP23- ■ ■ L1 -Z**	–
	89	320	16.47	4430	1.5	53	**2KJ3303- ■ FP23- ■ ■ K1 -Z**	–
	103	275	14.11	4400	1.7	53	**2KJ3303- ■ FP23- ■ ■ J1 -Z**	–
	118	240	12.40	4370	2	53	**2KJ3303- ■ FP23- ■ ■ H1 -Z**	–
	140	205	10.46	4270	2.3	53	**2KJ3303- ■ FP23- ■ ■ G1 -Z**	–
	160	179	9.12	4190	2.7	53	**2KJ3303- ■ FP23- ■ ■ F1 -Z**	–
	174	165	8.40	4010	2.7	53	**2KJ3303- ■ FP23- ■ ■ E1 -Z**	–
	203	141	7.20	3920	3.2	53	**2KJ3303- ■ FP23- ■ ■ D1 -Z**	–
	231	124	6.33	3840	3.5	53	**2KJ3303- ■ FP23- ■ ■ C1 -Z**	–
	273	105	5.34	3720	3.8	53	**2KJ3303- ■ FP23- ■ ■ B1 -Z**	–
	314	91	4.65	3620	4.1	53	**2KJ3303- ■ FP23- ■ ■ A1 -Z**	–
	FZ.39-LE100ZLSB4P							
	118	240	12.38	3760	0.86	42	**2KJ3302- ■ FP23- ■ ■ K1 -Z**	–
	138	205	10.61	3740	0.96	42	**2KJ3302- ■ FP23- ■ ■ J1 -Z**	–
	160	179	9.13	3680	1.1	42	**2KJ3302- ■ FP23- ■ ■ H1 -Z**	–
	180	159	8.10	3490	1.1	42	**2KJ3302- ■ FP23- ■ ■ G1 -Z**	–
	217	132	6.74	3430	1.1	42	**2KJ3302- ■ FP23- ■ ■ F1 -Z**	–
	230	125	6.35	3400	1.2	42	**2KJ3302- ■ FP23- ■ ■ E1 -Z**	–
	257	112	5.69	3340	1.3	42	**2KJ3302- ■ FP23- ■ ■ D1 -Z**	–
	302	95	4.84	3260	1.3	42	**2KJ3302- ■ FP23- ■ ■ C1 -Z**	–
	352	81	4.15	3180	1.4	42	**2KJ3302- ■ FP23- ■ ■ B1 -Z**	–
	409	70	3.57	3080	1.5	42	**2KJ3302- ■ FP23- ■ ■ A1 -Z**	–
	FZ.29-LE100ZLSB4P							
	209	137	6.98	2300	0.9	35	**2KJ3301- ■ FP23- ■ ■ F1 -Z**	–
	239	120	6.12	2310	0.95	35	**2KJ3301- ■ FP23- ■ ■ E1 -Z**	–
	263	109	5.55	2300	0.99	35	**2KJ3301- ■ FP23- ■ ■ D1 -Z**	–
	280	102	5.22	2300	1	35	**2KJ3301- ■ FP23- ■ ■ C1 -Z**	–
	317	90	4.60	2280	1.1	35	**2KJ3301- ■ FP23- ■ ■ B1 -Z**	–
	365	78	4.00	2250	1.2	35	**2KJ3301- ■ FP23- ■ ■ A1 -Z**	–

Article No. supplement		
Shaft design	**1 or 9**	see page 10/49
Frequency and voltage	**2 or 9**	see page 11/2
Gearbox mounting type	**A, F, H or D**	see page 10/42

© Innomotics 2023

Selection and ordering data

P_N kW	n_2 rpm	T_2 Nm	i –	F_{R2} N	f_B –	m kg	Article No. (Article No. supplement, see below)	Additional identification code **-Z** with order code No. of poles
4	**FD.189-LE132MJ6P**							
	2.8	13600	347.35	110900	1.4	665	**2KJ3412- ■ HK23- ■ ■ T1 -Z**	**P01**
	3.1	12100	310.76	110900	1.6	665	**2KJ3412- ■ HK23- ■ ■ S1 -Z**	**P01**
	3.5	10900	280.27	110900	1.7	665	**2KJ3412- ■ HK23- ■ ■ R1 -Z**	**P01**
	3.9	9700	247.71	110900	2	665	**2KJ3412- ■ HK23- ■ ■ Q1 -Z**	**P01**
	FD.169-LE132MJ6P							
	2.6	14400	368.00	73500	0.94	453	**2KJ3411- ■ HK23- ■ ■ V1 -Z**	**P01**
	2.8	13400	343.01	73500	1	453	**2KJ3411- ■ HK23- ■ ■ U1 -Z**	**P01**
	3.2	11900	304.94	73500	1.1	453	**2KJ3411- ■ HK23- ■ ■ T1 -Z**	**P01**
	3.6	10700	273.80	73500	1.3	453	**2KJ3411- ■ HK23- ■ ■ S1 -Z**	**P01**
	FD.169-LE112ZMKB4P							
	4	9620	368.00	73500	1.4	426	**2KJ3411- ■ GJ23- ■ ■ V1 -Z**	–
	4.3	8970	343.01	73500	1.5	426	**2KJ3411- ■ GJ23- ■ ■ U1 -Z**	–
	4.8	7970	304.94	73500	1.7	426	**2KJ3411- ■ GJ23- ■ ■ T1 -Z**	–
	5.3	7160	273.80	73500	1.9	426	**2KJ3411- ■ GJ23- ■ ■ S1 -Z**	–
	5.9	6480	247.84	73500	2.1	426	**2KJ3411- ■ GJ23- ■ ■ R1 -Z**	–
	FD.149-LE112ZMKB4P							
	3.9	9860	377.00	65000	0.81	280	**2KJ3410- ■ GJ23- ■ ■ W1 -Z**	–
	4.5	8450	323.04	65000	0.95	280	**2KJ3410- ■ GJ23- ■ ■ V1 -Z**	–
	4.8	7950	304.03	65000	1	280	**2KJ3410- ■ GJ23- ■ ■ U1 -Z**	–
	5.1	7450	285.00	65000	1.1	280	**2KJ3410- ■ GJ23- ■ ■ T1 -Z**	–
	5.8	6610	252.64	65000	1.2	280	**2KJ3410- ■ GJ23- ■ ■ S1 -Z**	–
	6.5	5870	224.42	65000	1.4	280	**2KJ3410- ■ GJ23- ■ ■ R1 -Z**	–
	7.2	5290	202.50	65000	1.5	280	**2KJ3410- ■ GJ23- ■ ■ Q1 -Z**	–
	8.1	4690	179.44	65000	1.7	280	**2KJ3410- ■ GJ23- ■ ■ P1 -Z**	–
	9.2	4150	158.91	65000	1.9	280	**2KJ3410- ■ GJ23- ■ ■ N1 -Z**	–
	10	3700	141.43	65000	2.2	280	**2KJ3410- ■ GJ23- ■ ■ M1 -Z**	–
	FD.129-LE112ZMKB4P							
	6.3	6040	231.12	36000	0.8	192	**2KJ3408- ■ GJ23- ■ ■ M1 -Z**	–
	7.1	5390	206.32	36600	0.9	192	**2KJ3408- ■ GJ23- ■ ■ L1 -Z**	–
	7.9	4850	185.66	37200	1	192	**2KJ3408- ■ GJ23- ■ ■ K1 -Z**	–
	9.1	4210	161.14	37500	1.2	192	**2KJ3408- ■ GJ23- ■ ■ J1 -Z**	–
	10	3790	144.92	37500	1.3	192	**2KJ3408- ■ GJ23- ■ ■ H1 -Z**	–
	12	3310	126.66	37500	1.5	192	**2KJ3408- ■ GJ23- ■ ■ G1 -Z**	–
	13	2950	113.03	37500	1.6	192	**2KJ3408- ■ GJ23- ■ ■ F1 -Z**	–
	15	2600	99.58	37500	1.9	192	**2KJ3408- ■ GJ23- ■ ■ E1 -Z**	–
	17	2280	87.25	37500	2.1	192	**2KJ3408- ■ GJ23- ■ ■ D1 -Z**	–
	FD.109-LE112ZMKB4P							
	10	3830	146.65	25000	0.81	137	**2KJ3407- ■ GJ23- ■ ■ H1 -Z**	–
	12	3280	125.37	25000	0.95	137	**2KJ3407- ■ GJ23- ■ ■ G1 -Z**	–
	13	2920	111.95	25000	1.1	137	**2KJ3407- ■ GJ23- ■ ■ F1 -Z**	–
	15	2580	98.94	25000	1.2	137	**2KJ3407- ■ GJ23- ■ ■ E1 -Z**	–
	17	2270	86.83	25000	1.4	137	**2KJ3407- ■ GJ23- ■ ■ D1 -Z**	–
	19	1970	75.59	25000	1.6	137	**2KJ3407- ■ GJ23- ■ ■ C1 -Z**	–
	23	1690	64.62	25000	1.8	137	**2KJ3407- ■ GJ23- ■ ■ B1 -Z**	–
	26	1440	55.31	25000	2.1	137	**2KJ3407- ■ GJ23- ■ ■ A1 -Z**	–
	FZ.109-LE112ZMKB4P							
	21	1850	70.74	25000	1.7	134	**2KJ3307- ■ GJ23- ■ ■ B2 -Z**	–
	22	1700	65.30	25000	1.8	134	**2KJ3307- ■ GJ23- ■ ■ A2 -Z**	–
	24	1570	60.12	25000	2	134	**2KJ3307- ■ GJ23- ■ ■ X1 -Z**	–
	28	1340	51.27	25000	2.3	134	**2KJ3307- ■ GJ23- ■ ■ W1 -Z**	–
	30	1260	48.25	25000	2.5	134	**2KJ3307- ■ GJ23- ■ ■ V1 -Z**	–

Article No. supplement		
Shaft design	**1 or 9**	see page 10/49
Frequency and voltage	**2 or 9**	see page 11/2
Gearbox mounting type	**A, F, H or D**	see page 10/42

© Innomotics 2023

Selection and ordering data

P_N kW	n_2 rpm	T_2 Nm	i –	F_{R2} N	f_B –	m kg	Article No. (Article No. supplement, see below)	Additional identification code **-Z** with order code No. of poles
4	**FZ.109-LE112ZMKB4P**							
	33	1170	44.78	25000	2.6	134	**2KJ3307- ■ GJ23- ■ ■ U1 -Z**	–
	FD.89-LE112ZMKB4P							
	18	2090	79.95	17400	0.88	96	**2KJ3406- ■ GJ23- ■ ■ D1 -Z**	–
	21	1840	70.67	17400	1	96	**2KJ3406- ■ GJ23- ■ ■ C1 -Z**	–
	24	1570	60.09	17400	1.2	96	**2KJ3406- ■ GJ23- ■ ■ B1 -Z**	–
	28	1340	51.51	17400	1.4	96	**2KJ3406- ■ GJ23- ■ ■ A1 -Z**	–
	FZ.89-LE112ZMKB4P							
	24	1610	61.72	17400	1.1	95	**2KJ3306- ■ GJ23- ■ ■ B2 -Z**	–
	26	1450	55.72	17400	1.3	95	**2KJ3306- ■ GJ23- ■ ■ A2 -Z**	–
	29	1320	50.54	17400	1.4	95	**2KJ3306- ■ GJ23- ■ ■ X1 -Z**	–
	31	1220	46.66	17400	1.5	95	**2KJ3306- ■ GJ23- ■ ■ W1 -Z**	–
	34	1110	42.41	17400	1.7	95	**2KJ3306- ■ GJ23- ■ ■ V1 -Z**	–
	41	940	35.91	17400	2	95	**2KJ3306- ■ GJ23- ■ ■ U1 -Z**	–
	43	880	33.80	17400	2.1	95	**2KJ3306- ■ GJ23- ■ ■ T1 -Z**	–
	47	815	31.21	17400	2.3	95	**2KJ3306- ■ GJ23- ■ ■ S1 -Z**	–
	53	725	27.77	17400	2.5	95	**2KJ3306- ■ GJ23- ■ ■ R1 -Z**	–
	59	645	24.67	17400	2.9	95	**2KJ3306- ■ GJ23- ■ ■ Q1 -Z**	–
	FZ.79-LE112ZMKB4P							
	30	1250	48.03	13100	0.8	65	**2KJ3305- ■ GJ23- ■ ■ W1 -Z**	–
	34	1130	43.18	13300	0.89	65	**2KJ3305- ■ GJ23- ■ ■ V1 -Z**	–
	37	1020	39.06	13500	0.98	65	**2KJ3305- ■ GJ23- ■ ■ U1 -Z**	–
	40	940	36.05	13700	1.1	65	**2KJ3305- ■ GJ23- ■ ■ T1 -Z**	–
	44	860	33.02	13800	1.2	65	**2KJ3305- ■ GJ23- ■ ■ S1 -Z**	–
	53	725	27.71	14100	1.4	65	**2KJ3305- ■ GJ23- ■ ■ R1 -Z**	–
	56	680	26.08	14200	1.5	65	**2KJ3305- ■ GJ23- ■ ■ Q1 -Z**	–
	61	625	23.93	14300	1.6	65	**2KJ3305- ■ GJ23- ■ ■ P1 -Z**	–
	70	545	20.90	14500	1.8	65	**2KJ3305- ■ GJ23- ■ ■ N1 -Z**	–
	78	490	18.71	14500	2	65	**2KJ3305- ■ GJ23- ■ ■ M1 -Z**	–
	89	425	16.36	14500	2.3	65	**2KJ3305- ■ GJ23- ■ ■ L1 -Z**	–
	104	365	14.04	14500	2.7	65	**2KJ3305- ■ GJ23- ■ ■ K1 -Z**	–
	118	325	12.41	14400	3.1	65	**2KJ3305- ■ GJ23- ■ ■ J1 -Z**	–
	138	275	10.56	13900	3.6	65	**2KJ3305- ■ GJ23- ■ ■ H1 -Z**	–
	172	220	8.51	13100	3.2	65	**2KJ3305- ■ GJ23- ■ ■ F1 -Z**	–
	196	195	7.44	12700	3.7	65	**2KJ3305- ■ GJ23- ■ ■ E1 -Z**	–
	228	167	6.39	12200	4.3	65	**2KJ3305- ■ GJ23- ■ ■ D1 -Z**	–
	259	148	5.64	11800	4.7	65	**2KJ3305- ■ GJ23- ■ ■ C1 -Z**	–
	FZ.69-LE112ZMKB4P							
	53	720	27.62	5580	0.83	58	**2KJ3304- ■ GJ23- ■ ■ P1 -Z**	–
	64	600	22.92	5710	1	58	**2KJ3304- ■ GJ23- ■ ■ N1 -Z**	–
	68	560	21.57	5770	1.1	58	**2KJ3304- ■ GJ23- ■ ■ M1 -Z**	–
	72	530	20.37	5780	1.1	58	**2KJ3304- ■ GJ23- ■ ■ L1 -Z**	–
	84	450	17.33	5800	1.3	58	**2KJ3304- ■ GJ23- ■ ■ K1 -Z**	–
	98	385	14.85	5770	1.5	58	**2KJ3304- ■ GJ23- ■ ■ J1 -Z**	–
	112	340	13.06	5710	1.8	58	**2KJ3304- ■ GJ23- ■ ■ H1 -Z**	–
	133	285	11.01	5620	2.1	58	**2KJ3304- ■ GJ23- ■ ■ G1 -Z**	–
	152	250	9.60	5500	2.4	58	**2KJ3304- ■ GJ23- ■ ■ F1 -Z**	–
	164	230	8.90	5380	2	58	**2KJ3304- ■ GJ23- ■ ■ E1 -Z**	–
	192	199	7.62	5230	2.3	58	**2KJ3304- ■ GJ23- ■ ■ D1 -Z**	–
	218	175	6.70	5110	2.5	58	**2KJ3304- ■ GJ23- ■ ■ C1 -Z**	–
	258	148	5.66	4950	2.8	58	**2KJ3304- ■ GJ23- ■ ■ B1 -Z**	–
	296	129	4.93	4800	3	58	**2KJ3304- ■ GJ23- ■ ■ A1 -Z**	–

Article No. supplement		
Shaft design	**1 or 9**	see page 10/49
Frequency and voltage	**2 or 9**	see page 11/2
Gearbox mounting type	**A, F, H or D**	see page 10/42

© Innomotics 2023

Selection and ordering data

P_N kW	n_2 rpm	T_2 Nm	i –	F_{R2} N	f_B –	m kg	Article No. (Article No. supplement, see below)	Additional identification code **-Z** with order code No. of poles
4	**FZ.49-LE112ZMKB4P**							
	67	570	21.77	3430	0.84	53	**2KJ3303- ■ GJ23- ■ ■ N1 -Z**	–
	71	535	20.49	3520	0.9	53	**2KJ3303- ■ GJ23- ■ ■ M1 -Z**	–
	75	505	19.35	3580	0.95	53	**2KJ3303- ■ GJ23- ■ ■ L1 -Z**	–
	89	430	16.47	3710	1.1	53	**2KJ3303- ■ GJ23- ■ ■ K1 -Z**	–
	103	365	14.11	3810	1.3	53	**2KJ3303- ■ GJ23- ■ ■ J1 -Z**	–
	118	320	12.40	3840	1.5	53	**2KJ3303- ■ GJ23- ■ ■ H1 -Z**	–
	140	270	10.46	3840	1.8	53	**2KJ3303- ■ GJ23- ■ ■ G1 -Z**	–
	160	235	9.12	3820	2	53	**2KJ3303- ■ GJ23- ■ ■ F1 -Z**	–
	174	220	8.40	3610	2	53	**2KJ3303- ■ GJ23- ■ ■ E1 -Z**	–
	203	188	7.20	3580	2.4	53	**2KJ3303- ■ GJ23- ■ ■ D1 -Z**	–
	231	166	6.33	3530	2.6	53	**2KJ3303- ■ GJ23- ■ ■ C1 -Z**	–
	273	140	5.34	3460	2.9	53	**2KJ3303- ■ GJ23- ■ ■ B1 -Z**	–
	314	122	4.65	3390	3.1	53	**2KJ3303- ■ GJ23- ■ ■ A1 -Z**	–
	FZ.39-LE112ZMKB4P							
	217	176	6.74	3060	0.86	45	**2KJ3302- ■ GJ23- ■ ■ F1 -Z**	–
	230	166	6.35	3050	0.9	45	**2KJ3302- ■ GJ23- ■ ■ E1 -Z**	–
	257	149	5.69	3040	0.94	45	**2KJ3302- ■ GJ23- ■ ■ D1 -Z**	–
	302	127	4.84	3000	1	45	**2KJ3302- ■ GJ23- ■ ■ C1 -Z**	–
	352	109	4.15	2940	1.1	45	**2KJ3302- ■ GJ23- ■ ■ B1 -Z**	–
	409	93	3.57	2890	1.2	45	**2KJ3302- ■ GJ23- ■ ■ A1 -Z**	–
5.5	**FD.189-LE132ZMS6P**							
	2.8	18700	347.35	110900	1	667	**2KJ3412- ■ HL23- ■ ■ T1 -Z**	**P01**
	3.1	16700	310.76	110900	1.1	667	**2KJ3412- ■ HL23- ■ ■ S1 -Z**	**P01**
	3.5	15000	280.27	110900	1.3	667	**2KJ3412- ■ HL23- ■ ■ R1 -Z**	**P01**
	3.9	13300	247.71	110900	1.4	667	**2KJ3412- ■ HL23- ■ ■ Q1 -Z**	**P01**
	FD.189-LE132ZST4P							
	4.2	12400	347.35	110900	1.5	667	**2KJ3412- ■ HJ23- ■ ■ T1 -Z**	–
	4.7	11100	310.76	110900	1.7	667	**2KJ3412- ■ HJ23- ■ ■ S1 -Z**	–
	5.2	10000	280.27	110900	1.9	667	**2KJ3412- ■ HJ23- ■ ■ R1 -Z**	–
	5.9	8850	247.71	110900	2.1	667	**2KJ3412- ■ HJ23- ■ ■ Q1 -Z**	–
	FD.169-LE132ZMS6P							
	3.2	16400	304.94	73500	0.83	455	**2KJ3411- ■ HL23- ■ ■ T1 -Z**	**P01**
	3.6	14700	273.80	73500	0.92	455	**2KJ3411- ■ HL23- ■ ■ S1 -Z**	**P01**
	FD.169-LE132ZST4P							
	4	13100	368.00	73500	1	455	**2KJ3411- ■ HJ23- ■ ■ V1 -Z**	–
	4.3	12200	343.01	73500	1.1	455	**2KJ3411- ■ HJ23- ■ ■ U1 -Z**	–
	4.8	10800	304.94	73500	1.2	455	**2KJ3411- ■ HJ23- ■ ■ T1 -Z**	–
	5.4	9780	273.80	73500	1.4	455	**2KJ3411- ■ HJ23- ■ ■ S1 -Z**	–
	5.9	8850	247.84	73500	1.5	455	**2KJ3411- ■ HJ23- ■ ■ R1 -Z**	–
	6.8	7770	217.70	73500	1.7	455	**2KJ3411- ■ HJ23- ■ ■ Q1 -Z**	–
	7.5	7040	197.27	73500	1.9	455	**2KJ3411- ■ HJ23- ■ ■ P1 -Z**	–
	FD.149-LE132ZST4P							
	5.8	9020	252.64	65000	0.89	308	**2KJ3410- ■ HJ23- ■ ■ S1 -Z**	–
	6.6	8010	224.42	65000	1	308	**2KJ3410- ■ HJ23- ■ ■ R1 -Z**	–
	7.3	7230	202.50	65000	1.1	308	**2KJ3410- ■ HJ23- ■ ■ Q1 -Z**	–
	8.2	6410	179.44	65000	1.2	308	**2KJ3410- ■ HJ23- ■ ■ P1 -Z**	–
	9.3	5670	158.91	65000	1.4	308	**2KJ3410- ■ HJ23- ■ ■ N1 -Z**	–
	10	5050	141.43	65000	1.6	308	**2KJ3410- ■ HJ23- ■ ■ M1 -Z**	–
	12	4520	126.73	65000	1.8	308	**2KJ3410- ■ HJ23- ■ ■ L1 -Z**	–
	13	4010	112.36	65000	2	308	**2KJ3410- ■ HJ23- ■ ■ K1 -Z**	–

Article No. supplement		
Shaft design	**1 or 9**	see page 10/49
Frequency and voltage	**2 or 9**	see page 11/2
Gearbox mounting type	**A, F, H or D**	see page 10/42

© Innomotics 2023

Selection and ordering data

P_N kW	n_2 rpm	T_2 Nm	i –	F_{R2} N	f_B –	m kg	Article No. (Article No. supplement, see below)	Additional identification code **-Z** with order code No. of poles
5.5	**FD.129-LE132ZST4P**							
	9.1	5750	161.14	36300	0.84	222	**2KJ3408- ■ HJ23- ■ ■ J1 -Z**	–
	10	5170	144.92	36800	0.94	222	**2KJ3408- ■ HJ23- ■ ■ H1 -Z**	–
	12	4520	126.66	37500	1.1	222	**2KJ3408- ■ HJ23- ■ ■ G1 -Z**	–
	13	4030	113.03	37500	1.2	222	**2KJ3408- ■ HJ23- ■ ■ F1 -Z**	–
	15	3550	99.58	37500	1.4	222	**2KJ3408- ■ HJ23- ■ ■ E1 -Z**	–
	17	3110	87.25	37500	1.6	222	**2KJ3408- ■ HJ23- ■ ■ D1 -Z**	–
	19	2710	76.04	37500	1.8	222	**2KJ3408- ■ HJ23- ■ ■ C1 -Z**	–
	21	2480	69.40	37500	2	222	**2KJ3408- ■ HJ23- ■ ■ B1 -Z**	–
	25	2130	59.75	37500	2.3	222	**2KJ3408- ■ HJ23- ■ ■ A1 -Z**	–
	FZ.129-LE132ZST4P							
	21	2470	69.20	37500	2	217	**2KJ3308- ■ HJ23- ■ ■ A2 -Z**	–
	25	2110	59.22	37500	2.3	217	**2KJ3308- ■ HJ23- ■ ■ X1 -Z**	–
	26	1990	55.74	37500	2.4	217	**2KJ3308- ■ HJ23- ■ ■ W1 -Z**	–
	FD.109-LE132ZST4P							
	15	3530	98.94	25000	0.88	168	**2KJ3407- ■ HJ23- ■ ■ E1 -Z**	–
	17	3100	86.83	25000	1	168	**2KJ3407- ■ HJ23- ■ ■ D1 -Z**	–
	19	2700	75.59	25000	1.1	168	**2KJ3407- ■ HJ23- ■ ■ C1 -Z**	–
	23	2300	64.62	25000	1.3	168	**2KJ3407- ■ HJ23- ■ ■ B1 -Z**	–
	27	1970	55.31	25000	1.6	168	**2KJ3407- ■ HJ23- ■ ■ A1 -Z**	–
	FZ.109-LE132ZST4P							
	24	2140	60.12	25000	1.4	164	**2KJ3307- ■ HJ23- ■ ■ X1 -Z**	–
	29	1830	51.27	25000	1.7	164	**2KJ3307- ■ HJ23- ■ ■ W1 -Z**	–
	30	1720	48.25	25000	1.8	164	**2KJ3307- ■ HJ23- ■ ■ V1 -Z**	–
	33	1600	44.78	25000	1.9	164	**2KJ3307- ■ HJ23- ■ ■ U1 -Z**	–
	37	1410	39.59	25000	2.2	164	**2KJ3307- ■ HJ23- ■ ■ T1 -Z**	–
	42	1260	35.34	25000	2.5	164	**2KJ3307- ■ HJ23- ■ ■ S1 -Z**	–
	46	1130	31.80	25000	2.7	164	**2KJ3307- ■ HJ23- ■ ■ R1 -Z**	–
	FD.89-LE132ZST4P							
	24	2140	60.09	17400	0.86	127	**2KJ3406- ■ HJ23- ■ ■ B1 -Z**	–
	29	1840	51.51	17400	1	127	**2KJ3406- ■ HJ23- ■ ■ A1 -Z**	–
	FZ.89-LE132ZST4P							
	35	1510	42.41	17400	1.2	126	**2KJ3306- ■ HJ23- ■ ■ V1 -Z**	–
	41	1280	35.91	17400	1.4	126	**2KJ3306- ■ HJ23- ■ ■ U1 -Z**	–
	43	1200	33.80	17400	1.5	126	**2KJ3306- ■ HJ23- ■ ■ T1 -Z**	–
	47	1110	31.21	17400	1.7	126	**2KJ3306- ■ HJ23- ■ ■ S1 -Z**	–
	53	990	27.77	17400	1.9	126	**2KJ3306- ■ HJ23- ■ ■ R1 -Z**	–
	60	880	24.67	17400	2.1	126	**2KJ3306- ■ HJ23- ■ ■ Q1 -Z**	–
	67	785	22.08	17400	2.3	126	**2KJ3306- ■ HJ23- ■ ■ P1 -Z**	–
	78	675	18.88	17400	2.7	126	**2KJ3306- ■ HJ23- ■ ■ N1 -Z**	–
	87	600	16.86	17400	3.1	126	**2KJ3306- ■ HJ23- ■ ■ M1 -Z**	–
	99	530	14.90	17400	3.5	126	**2KJ3306- ■ HJ23- ■ ■ L1 -Z**	–
	193	270	7.60	17400	4.1	126	**2KJ3306- ■ HJ23- ■ ■ F1 -Z**	–
	FZ.79-LE132ZST4P							
	45	1180	33.02	13200	0.85	96	**2KJ3305- ■ HJ23- ■ ■ S1 -Z**	–
	53	990	27.71	13600	1	96	**2KJ3305- ■ HJ23- ■ ■ R1 -Z**	–
	56	930	26.08	13700	1.1	96	**2KJ3305- ■ HJ23- ■ ■ Q1 -Z**	–
	61	855	23.93	13900	1.2	96	**2KJ3305- ■ HJ23- ■ ■ P1 -Z**	–
	70	745	20.90	14100	1.3	96	**2KJ3305- ■ HJ23- ■ ■ N1 -Z**	–
	79	665	18.71	14200	1.5	96	**2KJ3305- ■ HJ23- ■ ■ M1 -Z**	–
	90	585	16.36	14300	1.7	96	**2KJ3305- ■ HJ23- ■ ■ L1 -Z**	–
	105	500	14.04	14000	2	96	**2KJ3305- ■ HJ23- ■ ■ K1 -Z**	–

Article No. supplement		
Shaft design	**1 or 9**	see page 10/49
Frequency and voltage	**2 or 9**	see page 11/2
Gearbox mounting type	**A, F, H or D**	see page 10/42

© Innomotics 2023

Selection and ordering data

P_N kW	n_2 rpm	T_2 Nm	i –	F_{R2} N	f_B –	m kg	Article No. (Article No. supplement, see below)	Additional identification code **-Z** with order code No. of poles
5.5	**FZ.79-LE132ZST4P**							
	118	440	12.41	13700	2.3	96	**2KJ3305- ■ HJ23- ■ ■ J1 -Z**	–
	139	375	10.56	13300	2.7	96	**2KJ3305- ■ HJ23- ■ ■ H1 -Z**	–
	162	320	9.05	12900	3.1	96	**2KJ3305- ■ HJ23- ■ ■ G1 -Z**	–
	173	300	8.51	12600	2.4	96	**2KJ3305- ■ HJ23- ■ ■ F1 -Z**	–
	198	265	7.44	12300	2.7	96	**2KJ3305- ■ HJ23- ■ ■ E1 -Z**	–
	230	225	6.39	11900	3.2	96	**2KJ3305- ■ HJ23- ■ ■ D1 -Z**	–
	261	200	5.64	11500	3.5	96	**2KJ3305- ■ HJ23- ■ ■ C1 -Z**	–
	306	172	4.80	11100	3.8	96	**2KJ3305- ■ HJ23- ■ ■ B1 -Z**	–
	358	147	4.11	10700	4.1	96	**2KJ3305- ■ HJ23- ■ ■ A1 -Z**	–
	FZ.69-LE132ZST4P							
	72	725	20.37	4560	0.82	88	**2KJ3304- ■ HJ23- ■ ■ L1 -Z**	–
	85	615	17.33	4760	0.97	88	**2KJ3304- ■ HJ23- ■ ■ K1 -Z**	–
	99	530	14.85	4860	1.1	88	**2KJ3304- ■ HJ23- ■ ■ J1 -Z**	–
	113	465	13.06	4920	1.3	88	**2KJ3304- ■ HJ23- ■ ■ H1 -Z**	–
	134	390	11.01	4950	1.5	88	**2KJ3304- ■ HJ23- ■ ■ G1 -Z**	–
	153	340	9.60	4930	1.7	88	**2KJ3304- ■ HJ23- ■ ■ F1 -Z**	–
	165	315	8.90	4810	1.5	88	**2KJ3304- ■ HJ23- ■ ■ E1 -Z**	–
	193	270	7.62	4760	1.7	88	**2KJ3304- ■ HJ23- ■ ■ D1 -Z**	–
	219	235	6.70	4710	1.8	88	**2KJ3304- ■ HJ23- ■ ■ C1 -Z**	–
	260	200	5.66	4590	2	88	**2KJ3304- ■ HJ23- ■ ■ B1 -Z**	–
	298	176	4.93	4490	2.2	88	**2KJ3304- ■ HJ23- ■ ■ A1 -Z**	–
	FZ.49-LE132ZST4P							
	89	585	16.47	2680	0.82	81	**2KJ3303- ■ HJ23- ■ ■ K1 -Z**	–
	104	500	14.11	2910	0.95	81	**2KJ3303- ■ HJ23- ■ ■ J1 -Z**	–
	119	440	12.40	3040	1.1	81	**2KJ3303- ■ HJ23- ■ ■ H1 -Z**	–
	141	370	10.46	3180	1.3	81	**2KJ3303- ■ HJ23- ■ ■ G1 -Z**	–
	161	325	9.12	3220	1.5	81	**2KJ3303- ■ HJ23- ■ ■ F1 -Z**	–
	175	300	8.40	3020	1.5	81	**2KJ3303- ■ HJ23- ■ ■ E1 -Z**	–
	204	255	7.20	3080	1.7	81	**2KJ3303- ■ HJ23- ■ ■ D1 -Z**	–
	232	225	6.33	3090	1.9	81	**2KJ3303- ■ HJ23- ■ ■ C1 -Z**	–
	275	191	5.34	3080	2.1	81	**2KJ3303- ■ HJ23- ■ ■ B1 -Z**	–
	316	166	4.65	3060	2.3	81	**2KJ3303- ■ HJ23- ■ ■ A1 -Z**	–
7.5	**FD.189-LE132ZMS4P**							
	4.2	16900	347.35	110900	1.1	667	**2KJ3412- ■ HL23- ■ ■ T1 -Z**	–
	4.2	16900	347.35	110900	1.1	667	**2KJ3412- ■ HL23- ■ ■ T1 -Z**	–
	4.7	15100	310.76	110900	1.3	667	**2KJ3412- ■ HL23- ■ ■ S1 -Z**	–
	4.7	15100	310.76	110900	1.3	667	**2KJ3412- ■ HL23- ■ ■ S1 -Z**	–
	5.2	13600	280.27	110900	1.4	667	**2KJ3412- ■ HL23- ■ ■ R1 -Z**	–
	5.2	13700	280.27	110900	1.4	667	**2KJ3412- ■ HL23- ■ ■ R1 -Z**	–
	5.9	12000	247.71	110900	1.6	667	**2KJ3412- ■ HL23- ■ ■ Q1 -Z**	–
	5.9	12100	247.71	110900	1.6	667	**2KJ3412- ■ HL23- ■ ■ Q1 -Z**	–
	6.5	11000	226.42	110900	1.7	667	**2KJ3412- ■ HL23- ■ ■ P1 -Z**	–
	6.5	11000	226.42	110900	1.7	667	**2KJ3412- ■ HL23- ■ ■ P1 -Z**	–
	7.2	9920	203.69	110900	1.9	667	**2KJ3412- ■ HL23- ■ ■ N1 -Z**	–
	7.2	9950	203.69	110900	1.9	667	**2KJ3412- ■ HL23- ■ ■ N1 -Z**	–
	8	8900	182.03	110900	2.1	667	**2KJ3412- ■ HL23- ■ ■ M1 -Z**	–
	8.1	8860	182.03	110900	2.1	667	**2KJ3412- ■ HL23- ■ ■ M1 -Z**	–
	FD.169-LE132ZMS4P							
	4.3	16700	343.01	73500	0.81	455	**2KJ3411- ■ HL23- ■ ■ U1 -Z**	–
	4.8	14900	304.94	73500	0.91	455	**2KJ3411- ■ HL23- ■ ■ T1 -Z**	–

Article No. supplement		
Shaft design	**1 or 9**	see page 10/49
Frequency and voltage	**2 or 9**	see page 11/2
Gearbox mounting type	**A, F, H or D**	see page 10/42

© Innomotics 2023

Selection and ordering data

P_N kW	n_2 rpm	T_2 Nm	i –	F_{R2} N	f_B –	m kg	Article No. (Article No. supplement, see below)	Additional identification code **-Z** with order code No. of poles
7.5	**FD.169-LE132ZMS4P**							
	5.4	13300	273.80	73500	1	455	**2KJ3411- ■ HL23- ■ ■ S1 -Z**	–
	5.9	12100	247.84	73500	1.1	455	**2KJ3411- ■ HL23- ■ ■ R1 -Z**	–
	6.7	10600	217.70	73500	1.3	455	**2KJ3411- ■ HL23- ■ ■ Q1 -Z**	–
	7.4	9640	197.27	73500	1.4	455	**2KJ3411- ■ HL23- ■ ■ P1 -Z**	–
	8.3	8590	175.69	73500	1.6	455	**2KJ3411- ■ HL23- ■ ■ N1 -Z**	–
	9.3	7710	157.76	73500	1.8	455	**2KJ3411- ■ HL23- ■ ■ M1 -Z**	–
	10	6880	140.77	73500	2	455	**2KJ3411- ■ HL23- ■ ■ L1 -Z**	–
	12	6130	125.49	73500	2.2	455	**2KJ3411- ■ HL23- ■ ■ K1 -Z**	–
	FD.149-LE132ZMS4P							
	7.2	9900	202.50	65000	0.81	308	**2KJ3410- ■ HL23- ■ ■ Q1 -Z**	–
	8.2	8770	179.44	65000	0.91	308	**2KJ3410- ■ HL23- ■ ■ P1 -Z**	–
	9.2	7760	158.91	65000	1	308	**2KJ3410- ■ HL23- ■ ■ N1 -Z**	–
	10	6910	141.43	65000	1.2	308	**2KJ3410- ■ HL23- ■ ■ M1 -Z**	–
	12	6190	126.73	65000	1.3	308	**2KJ3410- ■ HL23- ■ ■ L1 -Z**	–
	13	5490	112.36	65000	1.5	308	**2KJ3410- ■ HL23- ■ ■ K1 -Z**	–
	15	4840	99.18	65000	1.6	308	**2KJ3410- ■ HL23- ■ ■ J1 -Z**	–
	17	4260	87.20	64000	1.9	308	**2KJ3410- ■ HL23- ■ ■ H1 -Z**	–
	19	3860	78.98	62800	2.1	308	**2KJ3410- ■ HL23- ■ ■ G1 -Z**	–
	21	3360	68.76	61100	2.4	308	**2KJ3410- ■ HL23- ■ ■ F1 -Z**	–
	FD.129-LE132ZMS4P							
	13	5520	113.03	36500	0.88	222	**2KJ3408- ■ HL23- ■ ■ F1 -Z**	–
	15	4860	99.58	37100	1	222	**2KJ3408- ■ HL23- ■ ■ E1 -Z**	–
	17	4260	87.25	37500	1.1	222	**2KJ3408- ■ HL23- ■ ■ D1 -Z**	–
	19	3710	76.04	37500	1.3	222	**2KJ3408- ■ HL23- ■ ■ C1 -Z**	–
	21	3390	69.40	37500	1.4	222	**2KJ3408- ■ HL23- ■ ■ B1 -Z**	–
	25	2920	59.75	37500	1.7	222	**2KJ3408- ■ HL23- ■ ■ A1 -Z**	–
	FZ.129-LE132ZMS4P							
	21	3380	69.20	37500	1.4	217	**2KJ3308- ■ HL23- ■ ■ A2 -Z**	–
	25	2890	59.22	37500	1.7	217	**2KJ3308- ■ HL23- ■ ■ X1 -Z**	–
	26	2720	55.74	37500	1.8	217	**2KJ3308- ■ HL23- ■ ■ W1 -Z**	–
	28	2550	52.25	37500	1.9	217	**2KJ3308- ■ HL23- ■ ■ V1 -Z**	–
	32	2260	46.32	37500	2.1	217	**2KJ3308- ■ HL23- ■ ■ U1 -Z**	–
	36	2010	41.14	37500	2.4	217	**2KJ3308- ■ HL23- ■ ■ T1 -Z**	–
	39	1810	37.12	37500	2.7	217	**2KJ3308- ■ HL23- ■ ■ S1 -Z**	–
	FD.109-LE132ZMS4P							
	19	3690	75.59	25000	0.84	168	**2KJ3407- ■ HL23- ■ ■ C1 -Z**	–
	23	3150	64.62	25000	0.98	168	**2KJ3407- ■ HL23- ■ ■ B1 -Z**	–
	26	2700	55.31	25000	1.1	168	**2KJ3407- ■ HL23- ■ ■ A1 -Z**	–
	FZ.109-LE132ZMS4P							
	24	2930	60.12	25000	1.1	164	**2KJ3307- ■ HL23- ■ ■ X1 -Z**	–
	29	2500	51.27	25000	1.2	164	**2KJ3307- ■ HL23- ■ ■ W1 -Z**	–
	30	2350	48.25	25000	1.3	164	**2KJ3307- ■ HL23- ■ ■ V1 -Z**	–
	33	2180	44.78	25000	1.4	164	**2KJ3307- ■ HL23- ■ ■ U1 -Z**	–
	37	1930	39.59	25000	1.6	164	**2KJ3307- ■ HL23- ■ ■ T1 -Z**	–
	41	1720	35.34	25000	1.8	164	**2KJ3307- ■ HL23- ■ ■ S1 -Z**	–
	46	1550	31.80	25000	2	164	**2KJ3307- ■ HL23- ■ ■ R1 -Z**	–
	53	1340	27.60	25000	2.3	164	**2KJ3307- ■ HL23- ■ ■ Q1 -Z**	–
	59	1210	24.82	25000	2.6	164	**2KJ3307- ■ HL23- ■ ■ P1 -Z**	–
	68	1060	21.70	25000	2.9	164	**2KJ3307- ■ HL23- ■ ■ N1 -Z**	–
	FZ.89-LE132ZMS4P							
	35	2070	42.41	17400	0.89	126	**2KJ3306- ■ HL23- ■ ■ V1 -Z**	–

Article No. supplement		
Shaft design	**1 or 9**	see page 10/49
Frequency and voltage	**2 or 9**	see page 11/2
Gearbox mounting type	**A, F, H or D**	see page 10/42

© Innomotics 2023

Selection and ordering data

P_N kW	n_2 rpm	T_2 Nm	i –	F_{R2} N	f_B –	m kg	Article No. (Article No. supplement, see below)	Additional identification code **-Z** with order code No. of poles
7.5	**FZ.89-LE132ZMS4P**							
	41	1750	35.91	17400	1.1	126	**2KJ3306- ■ HL23- ■ ■ U1 -Z**	–
	43	1650	33.80	17400	1.1	126	**2KJ3306- ■ HL23- ■ ■ T1 -Z**	–
	47	1520	31.21	17400	1.2	126	**2KJ3306- ■ HL23- ■ ■ S1 -Z**	–
	53	1350	27.77	17400	1.4	126	**2KJ3306- ■ HL23- ■ ■ R1 -Z**	–
	59	1200	24.67	17400	1.5	126	**2KJ3306- ■ HL23- ■ ■ Q1 -Z**	–
	66	1080	22.08	17400	1.7	126	**2KJ3306- ■ HL23- ■ ■ P1 -Z**	–
	78	920	18.88	17400	2	126	**2KJ3306- ■ HL23- ■ ■ N1 -Z**	–
	87	820	16.86	17400	2.2	126	**2KJ3306- ■ HL23- ■ ■ M1 -Z**	–
	98	725	14.90	17400	2.5	126	**2KJ3306- ■ HL23- ■ ■ L1 -Z**	–
	112	635	13.07	17400	2.9	126	**2KJ3306- ■ HL23- ■ ■ K1 -Z**	–
	129	555	11.38	17400	3.3	126	**2KJ3306- ■ HL23- ■ ■ J1 -Z**	–
	151	475	9.73	17400	3.9	126	**2KJ3306- ■ HL23- ■ ■ H1 -Z**	–
	193	370	7.60	17300	3	126	**2KJ3306- ■ HL23- ■ ■ F1 -Z**	–
	218	325	6.72	16800	3.4	126	**2KJ3306- ■ HL23- ■ ■ E1 -Z**	–
	248	285	5.90	16200	3.8	126	**2KJ3306- ■ HL23- ■ ■ D1 -Z**	–
	286	250	5.13	15700	4.4	126	**2KJ3306- ■ HL23- ■ ■ C1 -Z**	–
	334	215	4.39	15100	4.9	126	**2KJ3306- ■ HL23- ■ ■ B1 -Z**	–
	390	184	3.76	14500	5.4	126	**2KJ3306- ■ HL23- ■ ■ A1 -Z**	–
	FZ.79-LE132ZMS4P							
	61	1170	23.93	13200	0.85	96	**2KJ3305- ■ HL23- ■ ■ P1 -Z**	–
	70	1020	20.90	13400	0.98	96	**2KJ3305- ■ HL23- ■ ■ N1 -Z**	–
	78	915	18.71	13300	1.1	96	**2KJ3305- ■ HL23- ■ ■ M1 -Z**	–
	90	800	16.36	13200	1.3	96	**2KJ3305- ■ HL23- ■ ■ L1 -Z**	–
	104	685	14.04	13100	1.5	96	**2KJ3305- ■ HL23- ■ ■ K1 -Z**	–
	118	605	12.41	12900	1.6	96	**2KJ3305- ■ HL23- ■ ■ J1 -Z**	–
	139	515	10.56	12600	1.9	96	**2KJ3305- ■ HL23- ■ ■ H1 -Z**	–
	162	440	9.05	12300	2.3	96	**2KJ3305- ■ HL23- ■ ■ G1 -Z**	–
	172	415	8.51	12000	1.7	96	**2KJ3305- ■ HL23- ■ ■ F1 -Z**	–
	197	360	7.44	11700	2	96	**2KJ3305- ■ HL23- ■ ■ E1 -Z**	–
	229	310	6.39	11400	2.3	96	**2KJ3305- ■ HL23- ■ ■ D1 -Z**	–
	260	275	5.64	11100	2.5	96	**2KJ3305- ■ HL23- ■ ■ C1 -Z**	–
	305	235	4.80	10700	2.8	96	**2KJ3305- ■ HL23- ■ ■ B1 -Z**	–
	356	200	4.11	10400	3	96	**2KJ3305- ■ HL23- ■ ■ A1 -Z**	–
	FZ.69-LE132ZMS4P							
	99	725	14.85	3660	0.83	88	**2KJ3304- ■ HL23- ■ ■ J1 -Z**	–
	112	635	13.06	3880	0.94	88	**2KJ3304- ■ HL23- ■ ■ H1 -Z**	–
	133	535	11.01	4060	1.1	88	**2KJ3304- ■ HL23- ■ ■ G1 -Z**	–
	153	465	9.60	4170	1.3	88	**2KJ3304- ■ HL23- ■ ■ F1 -Z**	–
	165	435	8.90	4040	1.1	88	**2KJ3304- ■ HL23- ■ ■ E1 -Z**	–
	192	370	7.62	4120	1.2	88	**2KJ3304- ■ HL23- ■ ■ D1 -Z**	–
	219	325	6.70	4130	1.3	88	**2KJ3304- ■ HL23- ■ ■ C1 -Z**	–
	259	275	5.66	4110	1.5	88	**2KJ3304- ■ HL23- ■ ■ B1 -Z**	–
	297	240	4.93	4080	1.6	88	**2KJ3304- ■ HL23- ■ ■ A1 -Z**	–
	FZ.49-LE132ZMS4P							
	140	510	10.46	2270	0.94	84	**2KJ3303- ■ HL23- ■ ■ G1 -Z**	–
	161	445	9.12	2440	1.1	84	**2KJ3303- ■ HL23- ■ ■ F1 -Z**	–
	174	410	8.40	2230	1.1	84	**2KJ3303- ■ HL23- ■ ■ E1 -Z**	–
	203	350	7.20	2400	1.3	84	**2KJ3303- ■ HL23- ■ ■ D1 -Z**	–
	231	305	6.33	2520	1.4	84	**2KJ3303- ■ HL23- ■ ■ C1 -Z**	–
	274	260	5.34	2580	1.5	84	**2KJ3303- ■ HL23- ■ ■ B1 -Z**	–
	315	225	4.65	2640	1.6	84	**2KJ3303- ■ HL23- ■ ■ A1 -Z**	–

Article No. supplement		
Shaft design	**1 or 9**	see page 10/49
Frequency and voltage	**2 or 9**	see page 11/2
Gearbox mounting type	**A, F, H or D**	see page 10/42

© Innomotics 2023

Selection and ordering data

P_N kW	n_2 rpm	T_2 Nm	i –	F_{R2} N	f_B –	m kg	Article No. (Article No. supplement, see below)	Additional identification code **-Z** with order code No. of poles
9.2	**FD.189-LE160MPA4P**							
	4.3	20600	347.35	110900	0.92	684	**2KJ3412- ■ JQ23- ■ ■ T1 -Z**	–
	4.8	18400	310.76	110900	1	684	**2KJ3412- ■ JQ23- ■ ■ S1 -Z**	–
	5.3	16600	280.27	110900	1.1	684	**2KJ3412- ■ JQ23- ■ ■ R1 -Z**	–
	6	14700	247.71	110900	1.3	684	**2KJ3412- ■ JQ23- ■ ■ Q1 -Z**	–
	6.5	13400	226.42	110900	1.4	684	**2KJ3412- ■ JQ23- ■ ■ P1 -Z**	–
	7.3	12000	203.69	110900	1.6	684	**2KJ3412- ■ JQ23- ■ ■ N1 -Z**	–
	8.1	10800	182.03	110900	1.8	684	**2KJ3412- ■ JQ23- ■ ■ M1 -Z**	–
	9	9770	164.61	110900	1.9	684	**2KJ3412- ■ JQ23- ■ ■ L1 -Z**	–
	10	8620	145.28	110900	2.2	684	**2KJ3412- ■ JQ23- ■ ■ K1 -Z**	–
	FD.169-LE160MPA4P							
	5.4	16200	273.80	73500	0.84	472	**2KJ3411- ■ JQ23- ■ ■ S1 -Z**	–
	6	14700	247.84	73500	0.92	472	**2KJ3411- ■ JQ23- ■ ■ R1 -Z**	–
	6.8	12900	217.70	73500	1.1	472	**2KJ3411- ■ JQ23- ■ ■ Q1 -Z**	–
	7.5	11700	197.27	73500	1.2	472	**2KJ3411- ■ JQ23- ■ ■ P1 -Z**	–
	8.4	10400	175.69	73500	1.3	472	**2KJ3411- ■ JQ23- ■ ■ N1 -Z**	–
	9.4	9360	157.76	73500	1.5	472	**2KJ3411- ■ JQ23- ■ ■ M1 -Z**	–
	11	8350	140.77	73500	1.6	472	**2KJ3411- ■ JQ23- ■ ■ L1 -Z**	–
	12	7450	125.49	73500	1.8	472	**2KJ3411- ■ JQ23- ■ ■ K1 -Z**	–
	13	6600	111.30	73500	2.1	472	**2KJ3411- ■ JQ23- ■ ■ J1 -Z**	–
	14	6060	102.18	73500	2.2	472	**2KJ3411- ■ JQ23- ■ ■ H1 -Z**	–
	FD.149-LE160MPA4P							
	9.3	9430	158.91	65000	0.85	325	**2KJ3410- ■ JQ23- ■ ■ N1 -Z**	–
	10	8390	141.43	65000	0.95	325	**2KJ3410- ■ JQ23- ■ ■ M1 -Z**	–
	12	7520	126.73	64400	1.1	325	**2KJ3410- ■ JQ23- ■ ■ L1 -Z**	–
	13	6670	112.36	63600	1.2	325	**2KJ3410- ■ JQ23- ■ ■ K1 -Z**	–
	15	5880	99.18	62600	1.4	325	**2KJ3410- ■ JQ23- ■ ■ J1 -Z**	–
	17	5170	87.20	61500	1.5	325	**2KJ3410- ■ JQ23- ■ ■ H1 -Z**	–
	19	4680	78.98	60500	1.7	325	**2KJ3410- ■ JQ23- ■ ■ G1 -Z**	–
	22	4080	68.76	59100	2	325	**2KJ3410- ■ JQ23- ■ ■ F1 -Z**	–
	26	3340	56.37	56900	2.4	325	**2KJ3410- ■ JQ23- ■ ■ E1 -Z**	–
	FD.129-LE160MPA4P							
	15	5910	99.58	36100	0.82	239	**2KJ3408- ■ JQ23- ■ ■ E1 -Z**	–
	17	5180	87.25	36800	0.94	239	**2KJ3408- ■ JQ23- ■ ■ D1 -Z**	–
	19	4510	76.04	37500	1.1	239	**2KJ3408- ■ JQ23- ■ ■ C1 -Z**	–
	21	4120	69.40	37500	1.2	239	**2KJ3408- ■ JQ23- ■ ■ B1 -Z**	–
	25	3540	59.75	37500	1.4	239	**2KJ3408- ■ JQ23- ■ ■ A1 -Z**	–
	FZ.129-LE160MPA4P							
	21	4100	69.20	37500	1.2	234	**2KJ3308- ■ JQ23- ■ ■ A2 -Z**	–
	25	3510	59.22	37500	1.4	234	**2KJ3308- ■ JQ23- ■ ■ X1 -Z**	–
	27	3300	55.74	37500	1.5	234	**2KJ3308- ■ JQ23- ■ ■ W1 -Z**	–
	28	3100	52.25	37500	1.6	234	**2KJ3308- ■ JQ23- ■ ■ V1 -Z**	–
	32	2750	46.32	37500	1.8	234	**2KJ3308- ■ JQ23- ■ ■ U1 -Z**	–
	36	2440	41.14	37500	2	234	**2KJ3308- ■ JQ23- ■ ■ T1 -Z**	–
	40	2200	37.12	37500	2.2	234	**2KJ3308- ■ JQ23- ■ ■ S1 -Z**	–
	45	1950	32.90	37500	2.5	234	**2KJ3308- ■ JQ23- ■ ■ R1 -Z**	–
	51	1720	29.13	37000	2.8	234	**2KJ3308- ■ JQ23- ■ ■ Q1 -Z**	–
	FD.109-LE160MPA4P							
	23	3830	64.62	25000	0.81	185	**2KJ3407- ■ JQ23- ■ ■ B1 -Z**	–
	27	3280	55.31	25000	0.94	185	**2KJ3407- ■ JQ23- ■ ■ A1 -Z**	–
	FZ.109-LE160MPA4P							
	25	3560	60.12	25000	0.87	182	**2KJ3307- ■ JQ23- ■ ■ X1 -Z**	–

Article No. supplement		
Shaft design	**1 or 9**	see page 10/49
Frequency and voltage	**2 or 9**	see page 11/2
Gearbox mounting type	**A, F, H or D**	see page 10/42

© Innomotics 2023

Selection and ordering data

P_N kW	n_2 rpm	T_2 Nm	i –	F_{R2} N	f_B –	m kg	Article No. (Article No. supplement, see below)	Additional identification code **-Z** with order code No. of poles
9.2	**FZ.109-LE160MPA4P**							
	29	3040	51.27	25000	1	182	**2KJ3307- ■ JQ23- ■ ■ W1 -Z**	–
	31	2860	48.25	25000	1.1	182	**2KJ3307- ■ JQ23- ■ ■ V1 -Z**	–
	33	2650	44.78	25000	1.2	182	**2KJ3307- ■ JQ23- ■ ■ U1 -Z**	–
	37	2350	39.59	25000	1.3	182	**2KJ3307- ■ JQ23- ■ ■ T1 -Z**	–
	42	2090	35.34	25000	1.5	182	**2KJ3307- ■ JQ23- ■ ■ S1 -Z**	–
	47	1880	31.80	25000	1.6	182	**2KJ3307- ■ JQ23- ■ ■ R1 -Z**	–
	54	1630	27.60	25000	1.9	182	**2KJ3307- ■ JQ23- ■ ■ Q1 -Z**	–
	60	1470	24.82	25000	2.1	182	**2KJ3307- ■ JQ23- ■ ■ P1 -Z**	–
	68	1280	21.70	25000	2.4	182	**2KJ3307- ■ JQ23- ■ ■ N1 -Z**	–
	76	1140	19.36	25000	2.7	182	**2KJ3307- ■ JQ23- ■ ■ M1 -Z**	–
	87	1010	17.06	24500	3.1	182	**2KJ3307- ■ JQ23- ■ ■ L1 -Z**	–
	99	885	14.95	23900	3.5	182	**2KJ3307- ■ JQ23- ■ ■ K1 -Z**	–
	164	535	9.02	21200	3.9	182	**2KJ3307- ■ JQ23- ■ ■ F1 -Z**	–
	186	470	7.94	20600	4.2	182	**2KJ3307- ■ JQ23- ■ ■ E1 -Z**	–
	FZ.89-LE160MPA4P							
	41	2130	35.91	17400	0.87	145	**2KJ3306- ■ JQ23- ■ ■ U1 -Z**	–
	44	2000	33.80	17400	0.92	145	**2KJ3306- ■ JQ23- ■ ■ T1 -Z**	–
	47	1850	31.21	17400	1	145	**2KJ3306- ■ JQ23- ■ ■ S1 -Z**	–
	53	1640	27.77	17400	1.1	145	**2KJ3306- ■ JQ23- ■ ■ R1 -Z**	–
	60	1460	24.67	17400	1.3	145	**2KJ3306- ■ JQ23- ■ ■ Q1 -Z**	–
	67	1310	22.08	17400	1.4	145	**2KJ3306- ■ JQ23- ■ ■ P1 -Z**	–
	78	1120	18.88	17400	1.7	145	**2KJ3306- ■ JQ23- ■ ■ N1 -Z**	–
	88	1000	16.86	17400	1.8	145	**2KJ3306- ■ JQ23- ■ ■ M1 -Z**	–
	99	885	14.90	17400	2.1	145	**2KJ3306- ■ JQ23- ■ ■ L1 -Z**	–
	113	775	13.07	17400	2.4	145	**2KJ3306- ■ JQ23- ■ ■ K1 -Z**	–
	130	675	11.38	17400	2.7	145	**2KJ3306- ■ JQ23- ■ ■ J1 -Z**	–
	152	575	9.73	17400	3.2	145	**2KJ3306- ■ JQ23- ■ ■ H1 -Z**	–
	178	495	8.33	17300	3.5	145	**2KJ3306- ■ JQ23- ■ ■ G1 -Z**	–
	195	450	7.60	16900	2.4	145	**2KJ3306- ■ JQ23- ■ ■ F1 -Z**	–
	220	395	6.72	16400	2.8	145	**2KJ3306- ■ JQ23- ■ ■ E1 -Z**	–
	251	350	5.90	15900	3.2	145	**2KJ3306- ■ JQ23- ■ ■ D1 -Z**	–
	288	305	5.13	15400	3.6	145	**2KJ3306- ■ JQ23- ■ ■ C1 -Z**	–
	337	260	4.39	14800	4.1	145	**2KJ3306- ■ JQ23- ■ ■ B1 -Z**	–
	394	220	3.76	14300	4.4	145	**2KJ3306- ■ JQ23- ■ ■ A1 -Z**	–
	FZ.79-LE160MPA4P							
	71	1240	20.90	12200	0.81	114	**2KJ3305- ■ JQ23- ■ ■ N1 -Z**	–
	79	1110	18.71	12300	0.9	114	**2KJ3305- ■ JQ23- ■ ■ M1 -Z**	–
	90	970	16.36	12300	1	114	**2KJ3305- ■ JQ23- ■ ■ L1 -Z**	–
	105	830	14.04	12200	1.2	114	**2KJ3305- ■ JQ23- ■ ■ K1 -Z**	–
	119	735	12.41	12100	1.4	114	**2KJ3305- ■ JQ23- ■ ■ J1 -Z**	–
	140	625	10.56	12000	1.6	114	**2KJ3305- ■ JQ23- ■ ■ H1 -Z**	–
	164	535	9.05	11700	1.9	114	**2KJ3305- ■ JQ23- ■ ■ G1 -Z**	–
	174	505	8.51	11500	1.4	114	**2KJ3305- ■ JQ23- ■ ■ F1 -Z**	–
	199	440	7.44	11300	1.6	114	**2KJ3305- ■ JQ23- ■ ■ E1 -Z**	–
	232	375	6.39	11000	1.9	114	**2KJ3305- ■ JQ23- ■ ■ D1 -Z**	–
	262	335	5.64	10700	2.1	114	**2KJ3305- ■ JQ23- ■ ■ C1 -Z**	–
	308	285	4.80	10400	2.3	114	**2KJ3305- ■ JQ23- ■ ■ B1 -Z**	–
	360	240	4.11	10100	2.5	114	**2KJ3305- ■ JQ23- ■ ■ A1 -Z**	–
11	**FD.189-LE160MPB4P**							
	4.7	22100	310.76	110800	0.86	676	**2KJ3412- ■ JR23- ■ ■ S1 -Z**	–
	5.3	19900	280.27	110900	0.95	676	**2KJ3412- ■ JR23- ■ ■ R1 -Z**	–

Article No. supplement		
Shaft design	**1 or 9**	see page 10/49
Frequency and voltage	**2 or 9**	see page 11/2
Gearbox mounting type	**A, F, H or D**	see page 10/42

© Innomotics 2023

Selection and ordering data

P_N kW	n_2 rpm	T_2 Nm	i –	F_{R2} N	f_B –	m kg	Article No. (Article No. supplement, see below)	Additional identification code **-Z** with order code No. of poles
11	**FD.189-LE160MPB4P**							
	6	17600	247.71	110900	1.1	676	**2KJ3412- ■ JR23- ■ ■ Q1 -Z**	–
	6.5	16100	226.42	110900	1.2	676	**2KJ3412- ■ JR23- ■ ■ P1 -Z**	–
	7.2	14500	203.69	110900	1.3	676	**2KJ3412- ■ JR23- ■ ■ N1 -Z**	–
	8.1	12900	182.03	110900	1.5	676	**2KJ3412- ■ JR23- ■ ■ M1 -Z**	–
	9	11700	164.61	110900	1.6	676	**2KJ3412- ■ JR23- ■ ■ L1 -Z**	–
	10	10300	145.28	110900	1.8	676	**2KJ3412- ■ JR23- ■ ■ K1 -Z**	–
	11	9210	129.45	110900	2.1	676	**2KJ3412- ■ JR23- ■ ■ J1 -Z**	–
	FD.169-LE160MPB4P							
	6.8	15500	217.70	73500	0.88	464	**2KJ3411- ■ JR23- ■ ■ Q1 -Z**	–
	7.5	14000	197.27	73500	0.97	464	**2KJ3411- ■ JR23- ■ ■ P1 -Z**	–
	8.4	12500	175.69	73500	1.1	464	**2KJ3411- ■ JR23- ■ ■ N1 -Z**	–
	9.3	11200	157.76	73500	1.2	464	**2KJ3411- ■ JR23- ■ ■ M1 -Z**	–
	10	10000	140.77	73500	1.4	464	**2KJ3411- ■ JR23- ■ ■ L1 -Z**	–
	12	8930	125.49	73500	1.5	464	**2KJ3411- ■ JR23- ■ ■ K1 -Z**	–
	13	7920	111.30	73500	1.7	464	**2KJ3411- ■ JR23- ■ ■ J1 -Z**	–
	14	7270	102.18	73500	1.9	464	**2KJ3411- ■ JR23- ■ ■ H1 -Z**	–
	16	6410	90.03	73500	2.1	464	**2KJ3411- ■ JR23- ■ ■ G1 -Z**	–
	FD.149-LE160MPB4P							
	12	9020	126.73	60700	0.89	317	**2KJ3410- ■ JR23- ■ ■ L1 -Z**	–
	13	8000	112.36	60300	1	317	**2KJ3410- ■ JR23- ■ ■ K1 -Z**	–
	15	7060	99.18	59700	1.1	317	**2KJ3410- ■ JR23- ■ ■ J1 -Z**	–
	17	6210	87.20	58900	1.3	317	**2KJ3410- ■ JR23- ■ ■ H1 -Z**	–
	19	5620	78.98	58200	1.4	317	**2KJ3410- ■ JR23- ■ ■ G1 -Z**	–
	21	4890	68.76	57100	1.6	317	**2KJ3410- ■ JR23- ■ ■ F1 -Z**	–
	26	4010	56.37	55300	2	317	**2KJ3410- ■ JR23- ■ ■ E1 -Z**	–
	29	3560	50.01	54100	2.2	317	**2KJ3410- ■ JR23- ■ ■ D1 -Z**	–
	33	3220	45.30	53100	2.5	317	**2KJ3410- ■ JR23- ■ ■ C1 -Z**	–
	FZ.149-LE160MPB4P							
	30	3450	48.48	53800	2.3	311	**2KJ3310- ■ JR23- ■ ■ T1 -Z**	–
	34	3120	43.89	52800	2.6	311	**2KJ3310- ■ JR23- ■ ■ S1 -Z**	–
	FD.129-LE160MPB4P							
	19	5410	76.04	36600	0.9	231	**2KJ3408- ■ JR23- ■ ■ C1 -Z**	–
	21	4940	69.40	37100	0.98	231	**2KJ3408- ■ JR23- ■ ■ B1 -Z**	–
	25	4250	59.75	37500	1.1	231	**2KJ3408- ■ JR23- ■ ■ A1 -Z**	–
	FZ.129-LE160MPB4P							
	21	4920	69.20	37100	0.98	226	**2KJ3308- ■ JR23- ■ ■ A2 -Z**	–
	25	4210	59.22	37500	1.1	226	**2KJ3308- ■ JR23- ■ ■ X1 -Z**	–
	26	3970	55.74	37500	1.2	226	**2KJ3308- ■ JR23- ■ ■ W1 -Z**	–
	28	3720	52.25	37500	1.3	226	**2KJ3308- ■ JR23- ■ ■ V1 -Z**	–
	32	3290	46.32	37500	1.5	226	**2KJ3308- ■ JR23- ■ ■ U1 -Z**	–
	36	2930	41.14	37500	1.7	226	**2KJ3308- ■ JR23- ■ ■ T1 -Z**	–
	40	2640	37.12	37500	1.8	226	**2KJ3308- ■ JR23- ■ ■ S1 -Z**	–
	45	2340	32.90	36900	2.1	226	**2KJ3308- ■ JR23- ■ ■ R1 -Z**	–
	51	2070	29.13	36100	2.3	226	**2KJ3308- ■ JR23- ■ ■ Q1 -Z**	–
	57	1840	25.93	35300	2.6	226	**2KJ3308- ■ JR23- ■ ■ P1 -Z**	–
	63	1650	23.23	34500	2.9	226	**2KJ3308- ■ JR23- ■ ■ N1 -Z**	–
	FZ.109-LE160MPB4P							
	29	3650	51.27	25000	0.85	174	**2KJ3307- ■ JR23- ■ ■ W1 -Z**	–
	31	3430	48.25	25000	0.9	174	**2KJ3307- ■ JR23- ■ ■ V1 -Z**	–
	33	3180	44.78	25000	0.97	174	**2KJ3307- ■ JR23- ■ ■ U1 -Z**	–
	37	2820	39.59	25000	1.1	174	**2KJ3307- ■ JR23- ■ ■ T1 -Z**	–

Article No. supplement		
Shaft design	**1 or 9**	see page 10/49
Frequency and voltage	**2 or 9**	see page 11/2
Gearbox mounting type	**A, F, H or D**	see page 10/42

© Innomotics 2023

Selection and ordering data

P_N kW	n_2 rpm	T_2 Nm	i –	F_{R2} N	f_B –	m kg	Article No. (Article No. supplement, see below)	Additional identification code **-Z** with order code No. of poles
11	**FZ.109-LE160MPB4P**							
	42	2510	35.34	25000	1.2	174	**2KJ3307- ■ JR23- ■ ■ S1 -Z**	–
	46	2260	31.80	25000	1.4	174	**2KJ3307- ■ JR23- ■ ■ R1 -Z**	–
	53	1960	27.60	25000	1.6	174	**2KJ3307- ■ JR23- ■ ■ Q1 -Z**	–
	59	1760	24.82	25000	1.8	174	**2KJ3307- ■ JR23- ■ ■ P1 -Z**	–
	68	1540	21.70	24900	2	174	**2KJ3307- ■ JR23- ■ ■ N1 -Z**	–
	76	1370	19.36	24500	2.2	174	**2KJ3307- ■ JR23- ■ ■ M1 -Z**	–
	86	1210	17.06	23900	2.6	174	**2KJ3307- ■ JR23- ■ ■ L1 -Z**	–
	99	1060	14.95	23300	2.9	174	**2KJ3307- ■ JR23- ■ ■ K1 -Z**	–
	113	925	13.03	22700	3.3	174	**2KJ3307- ■ JR23- ■ ■ J1 -Z**	–
	124	845	11.89	22200	3.6	174	**2KJ3307- ■ JR23- ■ ■ H1 -Z**	–
	164	640	9.02	20900	3.3	174	**2KJ3307- ■ JR23- ■ ■ F1 -Z**	–
	186	565	7.94	20300	3.5	174	**2KJ3307- ■ JR23- ■ ■ E1 -Z**	–
	212	495	6.96	19600	3.8	174	**2KJ3307- ■ JR23- ■ ■ D1 -Z**	–
	243	430	6.07	19000	4.2	174	**2KJ3307- ■ JR23- ■ ■ C1 -Z**	–
	266	395	5.54	18500	4.4	174	**2KJ3307- ■ JR23- ■ ■ B1 -Z**	–
	309	340	4.77	17900	4.8	174	**2KJ3307- ■ JR23- ■ ■ A1 -Z**	–
	FZ.89-LE160MPB4P							
	47	2220	31.21	17400	0.83	137	**2KJ3306- ■ JR23- ■ ■ S1 -Z**	–
	53	1970	27.77	17400	0.94	137	**2KJ3306- ■ JR23- ■ ■ R1 -Z**	–
	60	1750	24.67	17400	1.1	137	**2KJ3306- ■ JR23- ■ ■ Q1 -Z**	–
	67	1570	22.08	17400	1.2	137	**2KJ3306- ■ JR23- ■ ■ P1 -Z**	–
	78	1340	18.88	17400	1.4	137	**2KJ3306- ■ JR23- ■ ■ N1 -Z**	–
	87	1200	16.86	17400	1.5	137	**2KJ3306- ■ JR23- ■ ■ M1 -Z**	–
	99	1060	14.90	17400	1.7	137	**2KJ3306- ■ JR23- ■ ■ L1 -Z**	–
	113	930	13.07	17400	2	137	**2KJ3306- ■ JR23- ■ ■ K1 -Z**	–
	130	810	11.38	17400	2.3	137	**2KJ3306- ■ JR23- ■ ■ J1 -Z**	–
	152	690	9.73	17400	2.7	137	**2KJ3306- ■ JR23- ■ ■ H1 -Z**	–
	177	590	8.33	16900	2.9	137	**2KJ3306- ■ JR23- ■ ■ G1 -Z**	–
	194	540	7.60	16500	2	137	**2KJ3306- ■ JR23- ■ ■ F1 -Z**	–
	219	475	6.72	16100	2.3	137	**2KJ3306- ■ JR23- ■ ■ E1 -Z**	–
	250	420	5.90	15600	2.6	137	**2KJ3306- ■ JR23- ■ ■ D1 -Z**	–
	288	365	5.13	15100	3	137	**2KJ3306- ■ JR23- ■ ■ C1 -Z**	–
	336	310	4.39	14600	3.4	137	**2KJ3306- ■ JR23- ■ ■ B1 -Z**	–
	392	265	3.76	14100	3.7	137	**2KJ3306- ■ JR23- ■ ■ A1 -Z**	–
	FZ.79-LE160MPB4P							
	90	1160	16.36	11300	0.86	106	**2KJ3305- ■ JR23- ■ ■ L1 -Z**	–
	105	1000	14.04	11400	1	106	**2KJ3305- ■ JR23- ■ ■ K1 -Z**	–
	119	880	12.41	11400	1.1	106	**2KJ3305- ■ JR23- ■ ■ J1 -Z**	–
	140	750	10.56	11300	1.3	106	**2KJ3305- ■ JR23- ■ ■ H1 -Z**	–
	163	645	9.05	11200	1.6	106	**2KJ3305- ■ JR23- ■ ■ G1 -Z**	–
	173	605	8.51	10900	1.2	106	**2KJ3305- ■ JR23- ■ ■ F1 -Z**	–
	198	530	7.44	10800	1.4	106	**2KJ3305- ■ JR23- ■ ■ E1 -Z**	–
	231	455	6.39	10600	1.6	106	**2KJ3305- ■ JR23- ■ ■ D1 -Z**	–
	262	400	5.64	10400	1.7	106	**2KJ3305- ■ JR23- ■ ■ C1 -Z**	–
	307	340	4.80	10100	1.9	106	**2KJ3305- ■ JR23- ■ ■ B1 -Z**	–
	359	290	4.11	9910	2.1	106	**2KJ3305- ■ JR23- ■ ■ A1 -Z**	–
15	**FD.189-LE160ZLL4P**							
	6.5	21900	226.42	110900	0.86	701	**2KJ3412- ■ JU23- ■ ■ P1 -Z**	–
	7.2	19700	203.69	110900	0.96	701	**2KJ3412- ■ JU23- ■ ■ N1 -Z**	–
	8.1	17600	182.03	110900	1.1	701	**2KJ3412- ■ JU23- ■ ■ M1 -Z**	–

Article No. supplement		
Shaft design	**1 or 9**	see page 10/49
Frequency and voltage	**2 or 9**	see page 11/2
Gearbox mounting type	**A, F, H or D**	see page 10/42

© Innomotics 2023

Selection and ordering data

P_N kW	n_2 rpm	T_2 Nm	i –	F_{R2} N	f_B –	m kg	Article No. (Article No. supplement, see below)	Additional identification code **-Z** with order code No. of poles
15	**FD.189-LE160ZLL4P**							
	9	15900	164.61	110900	1.2	701	**2KJ3412- ■ JU23- ■ ■ L1 -Z**	–
	10	14100	145.28	110900	1.3	701	**2KJ3412- ■ JU23- ■ ■ K1 -Z**	–
	11	12500	129.45	110900	1.5	701	**2KJ3412- ■ JU23- ■ ■ J1 -Z**	–
	13	11300	117.27	110900	1.7	701	**2KJ3412- ■ JU23- ■ ■ H1 -Z**	–
	14	10200	105.48	110900	1.9	701	**2KJ3412- ■ JU23- ■ ■ G1 -Z**	–
	17	8510	87.65	110900	2.2	701	**2KJ3412- ■ JU23- ■ ■ F1 -Z**	–
	FD.169-LE160ZLL4P							
	8.4	17000	175.69	73500	0.8	489	**2KJ3411- ■ JU23- ■ ■ N1 -Z**	–
	9.3	15300	157.76	73500	0.89	489	**2KJ3411- ■ JU23- ■ ■ M1 -Z**	–
	10	13600	140.77	73500	0.99	489	**2KJ3411- ■ JU23- ■ ■ L1 -Z**	–
	12	12100	125.49	73500	1.1	489	**2KJ3411- ■ JU23- ■ ■ K1 -Z**	–
	13	10800	111.30	73500	1.3	489	**2KJ3411- ■ JU23- ■ ■ J1 -Z**	–
	14	9920	102.18	73500	1.4	489	**2KJ3411- ■ JU23- ■ ■ H1 -Z**	–
	16	8740	90.03	73500	1.6	489	**2KJ3411- ■ JU23- ■ ■ G1 -Z**	–
	20	7170	73.85	73500	1.9	489	**2KJ3411- ■ JU23- ■ ■ F1 -Z**	–
	23	6280	64.75	73500	2.2	489	**2KJ3411- ■ JU23- ■ ■ E1 -Z**	–
	FD.149-LE160ZLL4P							
	15	9630	99.18	53300	0.83	342	**2KJ3410- ■ JU23- ■ ■ J1 -Z**	–
	17	8460	87.20	53300	0.94	342	**2KJ3410- ■ JU23- ■ ■ H1 -Z**	–
	19	7670	78.98	53100	1	342	**2KJ3410- ■ JU23- ■ ■ G1 -Z**	–
	21	6670	68.76	52700	1.2	342	**2KJ3410- ■ JU23- ■ ■ F1 -Z**	–
	26	5470	56.37	51600	1.5	342	**2KJ3410- ■ JU23- ■ ■ E1 -Z**	–
	29	4850	50.01	50900	1.6	342	**2KJ3410- ■ JU23- ■ ■ D1 -Z**	–
	33	4390	45.30	50200	1.8	342	**2KJ3410- ■ JU23- ■ ■ C1 -Z**	–
	37	3820	39.43	49100	2.1	342	**2KJ3410- ■ JU23- ■ ■ B1 -Z**	–
	46	3140	32.33	47400	2.4	342	**2KJ3410- ■ JU23- ■ ■ A1 -Z**	–
	FZ.149-LE160ZLL4P							
	30	4700	48.48	50700	1.7	336	**2KJ3310- ■ JU23- ■ ■ T1 -Z**	–
	34	4260	43.89	49900	1.9	336	**2KJ3310- ■ JU23- ■ ■ S1 -Z**	–
	38	3740	38.55	48900	2.1	336	**2KJ3310- ■ JU23- ■ ■ R1 -Z**	–
	42	3390	34.93	48100	2.4	336	**2KJ3310- ■ JU23- ■ ■ Q1 -Z**	–
	47	3020	31.11	47100	2.6	336	**2KJ3310- ■ JU23- ■ ■ P1 -Z**	–
	53	2710	27.94	46100	2.9	336	**2KJ3310- ■ JU23- ■ ■ N1 -Z**	–
	FD.129-LE160ZLL4P							
	25	5800	59.75	35800	0.84	256	**2KJ3408- ■ JU23- ■ ■ A1 -Z**	–
	FZ.129-LE160ZLL4P							
	25	5750	59.22	35800	0.84	251	**2KJ3308- ■ JU23- ■ ■ X1 -Z**	–
	26	5410	55.74	35800	0.9	251	**2KJ3308- ■ JU23- ■ ■ W1 -Z**	–
	28	5070	52.25	35800	0.96	251	**2KJ3308- ■ JU23- ■ ■ V1 -Z**	–
	32	4490	46.32	35600	1.1	251	**2KJ3308- ■ JU23- ■ ■ U1 -Z**	–
	36	3990	41.14	35300	1.2	251	**2KJ3308- ■ JU23- ■ ■ T1 -Z**	–
	40	3600	37.12	35000	1.3	251	**2KJ3308- ■ JU23- ■ ■ S1 -Z**	–
	45	3190	32.90	34600	1.5	251	**2KJ3308- ■ JU23- ■ ■ R1 -Z**	–
	51	2820	29.13	34000	1.7	251	**2KJ3308- ■ JU23- ■ ■ Q1 -Z**	–
	57	2510	25.93	33400	1.9	251	**2KJ3308- ■ JU23- ■ ■ P1 -Z**	–
	63	2250	23.23	32900	2.1	251	**2KJ3308- ■ JU23- ■ ■ N1 -Z**	–
	72	2000	20.60	32200	2.4	251	**2KJ3308- ■ JU23- ■ ■ M1 -Z**	–
	81	1760	18.18	31500	2.7	251	**2KJ3308- ■ JU23- ■ ■ L1 -Z**	–
	92	1550	15.99	30700	3.1	251	**2KJ3308- ■ JU23- ■ ■ K1 -Z**	–
	102	1400	14.48	30000	3.3	251	**2KJ3308- ■ JU23- ■ ■ J1 -Z**	–
	117	1220	12.61	29200	3.7	251	**2KJ3308- ■ JU23- ■ ■ H1 -Z**	–

Article No. supplement		
Shaft design	**1 or 9**	see page 10/49
Frequency and voltage	**2 or 9**	see page 11/2
Gearbox mounting type	**A, F, H or D**	see page 10/42

© Innomotics 2023

Selection and ordering data

P_N kW	n_2 rpm	T_2 Nm	i –	F_{R2} N	f_B –	m kg	Article No. (Article No. supplement, see below)	Additional identification code **-Z** with order code No. of poles
15	**FZ.129-LE160ZLL4P**							
	151	950	9.80	27300	3.8	251	**2KJ3308- ■ JU23- ■ ■ F1 -Z**	–
	FZ.109-LE160ZLL4P							
	37	3840	39.59	23300	0.81	199	**2KJ3307- ■ JU23- ■ ■ T1 -Z**	–
	42	3430	35.34	23400	0.9	199	**2KJ3307- ■ JU23- ■ ■ S1 -Z**	–
	46	3080	31.80	23500	1	199	**2KJ3307- ■ JU23- ■ ■ R1 -Z**	–
	53	2680	27.60	23400	1.2	199	**2KJ3307- ■ JU23- ■ ■ Q1 -Z**	–
	59	2410	24.82	23300	1.3	199	**2KJ3307- ■ JU23- ■ ■ P1 -Z**	–
	68	2100	21.70	23100	1.5	199	**2KJ3307- ■ JU23- ■ ■ N1 -Z**	–
	76	1880	19.36	22800	1.6	199	**2KJ3307- ■ JU23- ■ ■ M1 -Z**	–
	86	1650	17.06	22500	1.9	199	**2KJ3307- ■ JU23- ■ ■ L1 -Z**	–
	99	1450	14.95	22000	2.1	199	**2KJ3307- ■ JU23- ■ ■ K1 -Z**	–
	113	1260	13.03	21600	2.4	199	**2KJ3307- ■ JU23- ■ ■ J1 -Z**	–
	124	1150	11.89	21200	2.6	199	**2KJ3307- ■ JU23- ■ ■ H1 -Z**	–
	144	990	10.23	20700	2.9	199	**2KJ3307- ■ JU23- ■ ■ G1 -Z**	–
	164	875	9.02	20100	2.4	199	**2KJ3307- ■ JU23- ■ ■ F1 -Z**	–
	186	770	7.94	19600	2.6	199	**2KJ3307- ■ JU23- ■ ■ E1 -Z**	–
	212	675	6.96	19000	2.8	199	**2KJ3307- ■ JU23- ■ ■ D1 -Z**	–
	243	590	6.07	18400	3.1	199	**2KJ3307- ■ JU23- ■ ■ C1 -Z**	–
	266	535	5.54	18100	3.2	199	**2KJ3307- ■ JU23- ■ ■ B1 -Z**	–
	309	460	4.77	17500	3.5	199	**2KJ3307- ■ JU23- ■ ■ A1 -Z**	–
	FZ.89-LE160ZLL4P							
	67	2140	22.08	17100	0.86	162	**2KJ3306- ■ JU23- ■ ■ P1 -Z**	–
	78	1830	18.88	17200	1	162	**2KJ3306- ■ JU23- ■ ■ N1 -Z**	–
	87	1630	16.86	17200	1.1	162	**2KJ3306- ■ JU23- ■ ■ M1 -Z**	–
	99	1440	14.90	17100	1.3	162	**2KJ3306- ■ JU23- ■ ■ L1 -Z**	–
	113	1260	13.07	17000	1.5	162	**2KJ3306- ■ JU23- ■ ■ K1 -Z**	–
	130	1100	11.38	16700	1.7	162	**2KJ3306- ■ JU23- ■ ■ J1 -Z**	–
	152	945	9.73	16400	2	162	**2KJ3306- ■ JU23- ■ ■ H1 -Z**	–
	177	805	8.33	16000	2.2	162	**2KJ3306- ■ JU23- ■ ■ G1 -Z**	–
	194	735	7.60	15600	1.5	162	**2KJ3306- ■ JU23- ■ ■ F1 -Z**	–
	219	650	6.72	15300	1.7	162	**2KJ3306- ■ JU23- ■ ■ E1 -Z**	–
	250	570	5.90	15000	1.9	162	**2KJ3306- ■ JU23- ■ ■ D1 -Z**	–
	288	495	5.13	14600	2.2	162	**2KJ3306- ■ JU23- ■ ■ C1 -Z**	–
	336	425	4.39	14100	2.5	162	**2KJ3306- ■ JU23- ■ ■ B1 -Z**	–
	392	365	3.76	13600	2.7	162	**2KJ3306- ■ JU23- ■ ■ A1 -Z**	–
	FZ.79-LE160ZLL4P							
	119	1200	12.41	9750	0.83	131	**2KJ3305- ■ JU23- ■ ■ J1 -Z**	–
	140	1020	10.56	9930	0.98	131	**2KJ3305- ■ JU23- ■ ■ H1 -Z**	–
	163	875	9.05	10000	1.1	131	**2KJ3305- ■ JU23- ■ ■ G1 -Z**	–
	173	825	8.51	9720	0.87	131	**2KJ3305- ■ JU23- ■ ■ F1 -Z**	–
	198	720	7.44	9740	1	131	**2KJ3305- ■ JU23- ■ ■ E1 -Z**	–
	231	620	6.39	9680	1.2	131	**2KJ3305- ■ JU23- ■ ■ D1 -Z**	–
	262	545	5.64	9630	1.3	131	**2KJ3305- ■ JU23- ■ ■ C1 -Z**	–
	307	465	4.80	9470	1.4	131	**2KJ3305- ■ JU23- ■ ■ B1 -Z**	–
	359	395	4.11	9320	1.5	131	**2KJ3305- ■ JU23- ■ ■ A1 -Z**	–
18.5	**FD.189-LES180MQ4P**							
	8.1	21800	182.03	110900	0.87	776	**2KJ3412- ■ KL33- ■ ■ M1 -Z**	–
	8.9	19700	164.61	110900	0.96	776	**2KJ3412- ■ KL33- ■ ■ L1 -Z**	–
	10	17400	145.28	110900	1.1	776	**2KJ3412- ■ KL33- ■ ■ K1 -Z**	–
	11	15500	129.45	110900	1.2	776	**2KJ3412- ■ KL33- ■ ■ J1 -Z**	–

Article No. supplement		
Shaft design	**1 or 9**	see page 10/49
Frequency and voltage	**2 or 9**	see page 11/2
Gearbox mounting type	**A, F, H or D**	see page 10/42

© Innomotics 2023

Selection and ordering data

P_N kW	n_2 rpm	T_2 Nm	i –	F_{R2} N	f_B –	m kg	Article No. (Article No. supplement, see below)	Additional identification code **-Z** with order code No. of poles
18.5	**FD.189-LES180MQ4P**							
	13	14000	117.27	110900	1.3	776	**2KJ3412- ■ KL33- ■ ■ H1 -Z**	–
	14	12600	105.48	110900	1.5	776	**2KJ3412- ■ KL33- ■ ■ G1 -Z**	–
	17	10500	87.65	110900	1.8	776	**2KJ3412- ■ KL33- ■ ■ F1 -Z**	–
	19	9360	77.92	110900	2	776	**2KJ3412- ■ KL33- ■ ■ E1 -Z**	–
	FD.169-LES180MQ4P							
	10	16900	140.77	73500	0.8	558	**2KJ3411- ■ KL33- ■ ■ L1 -Z**	–
	12	15000	125.49	73500	0.9	558	**2KJ3411- ■ KL33- ■ ■ K1 -Z**	–
	13	13300	111.30	73500	1	558	**2KJ3411- ■ KL33- ■ ■ J1 -Z**	–
	14	12200	102.18	73500	1.1	558	**2KJ3411- ■ KL33- ■ ■ H1 -Z**	–
	16	10800	90.03	73500	1.3	558	**2KJ3411- ■ KL33- ■ ■ G1 -Z**	–
	20	8870	73.85	73500	1.5	558	**2KJ3411- ■ KL33- ■ ■ F1 -Z**	–
	23	7780	64.75	73500	1.7	558	**2KJ3411- ■ KL33- ■ ■ E1 -Z**	–
	29	6080	50.63	73500	2.2	558	**2KJ3411- ■ KL33- ■ ■ D1 -Z**	–
	32	5590	46.55	73500	2.4	558	**2KJ3411- ■ KL33- ■ ■ C1 -Z**	–
	FD.149-LES180MQ4P							
	19	9490	78.98	48600	0.84	417	**2KJ3410- ■ KL33- ■ ■ G1 -Z**	–
	21	8260	68.76	48700	0.97	417	**2KJ3410- ■ KL33- ■ ■ F1 -Z**	–
	26	6770	56.37	48500	1.2	417	**2KJ3410- ■ KL33- ■ ■ E1 -Z**	–
	29	6010	50.01	48100	1.3	417	**2KJ3410- ■ KL33- ■ ■ D1 -Z**	–
	32	5440	45.30	47600	1.5	417	**2KJ3410- ■ KL33- ■ ■ C1 -Z**	–
	37	4730	39.43	46900	1.7	417	**2KJ3410- ■ KL33- ■ ■ B1 -Z**	–
	45	3880	32.33	45600	1.9	417	**2KJ3410- ■ KL33- ■ ■ A1 -Z**	–
	FZ.149-LES180MQ4P							
	42	4190	34.93	46200	1.9	416	**2KJ3310- ■ KL33- ■ ■ Q1 -Z**	–
	47	3730	31.11	45400	2.1	416	**2KJ3310- ■ KL33- ■ ■ P1 -Z**	–
	53	3350	27.94	44600	2.4	416	**2KJ3310- ■ KL33- ■ ■ N1 -Z**	–
	59	2990	24.93	43700	2.7	416	**2KJ3310- ■ KL33- ■ ■ M1 -Z**	–
	66	2670	22.22	42800	3	416	**2KJ3310- ■ KL33- ■ ■ L1 -Z**	–
	FZ.129-LES180MQ4P							
	50	3500	29.13	32200	1.4	328	**2KJ3308- ■ KL33- ■ ■ Q1 -Z**	–
	57	3110	25.93	31800	1.6	328	**2KJ3308- ■ KL33- ■ ■ P1 -Z**	–
	63	2790	23.23	31400	1.7	328	**2KJ3308- ■ KL33- ■ ■ N1 -Z**	–
	71	2470	20.60	30900	2	328	**2KJ3308- ■ KL33- ■ ■ M1 -Z**	–
	81	2180	18.18	30300	2.2	328	**2KJ3308- ■ KL33- ■ ■ L1 -Z**	–
	92	1920	15.99	29700	2.5	328	**2KJ3308- ■ KL33- ■ ■ K1 -Z**	–
	102	1740	14.48	29100	2.7	328	**2KJ3308- ■ KL33- ■ ■ J1 -Z**	–
	117	1510	12.61	28400	3	328	**2KJ3308- ■ KL33- ■ ■ H1 -Z**	–
	142	1240	10.34	27300	3.5	328	**2KJ3308- ■ KL33- ■ ■ G1 -Z**	–
	150	1170	9.80	26700	3.1	328	**2KJ3308- ■ KL33- ■ ■ F1 -Z**	–
	170	1040	8.65	26000	3.5	328	**2KJ3308- ■ KL33- ■ ■ E1 -Z**	–
	193	910	7.60	25200	4	328	**2KJ3308- ■ KL33- ■ ■ D1 -Z**	–
	213	825	6.89	24700	4.4	328	**2KJ3308- ■ KL33- ■ ■ C1 -Z**	–
	FZ.109-LES180MQ4P							
	59	2980	24.82	21500	1	277	**2KJ3307- ■ KL33- ■ ■ P1 -Z**	–
	68	2600	21.70	21500	1.2	277	**2KJ3307- ■ KL33- ■ ■ N1 -Z**	–
	76	2320	19.36	21400	1.3	277	**2KJ3307- ■ KL33- ■ ■ M1 -Z**	–
	86	2050	17.06	21200	1.5	277	**2KJ3307- ■ KL33- ■ ■ L1 -Z**	–
	98	1790	14.95	20900	1.7	277	**2KJ3307- ■ KL33- ■ ■ K1 -Z**	–
	113	1560	13.03	20600	2	277	**2KJ3307- ■ KL33- ■ ■ J1 -Z**	–
	124	1420	11.89	20400	2.1	277	**2KJ3307- ■ KL33- ■ ■ H1 -Z**	–
	144	1230	10.23	19900	2.3	277	**2KJ3307- ■ KL33- ■ ■ G1 -Z**	–

Article No. supplement		
Shaft design	**1 or 9**	see page 10/49
Frequency and voltage	**2 or 9**	see page 11/2
Gearbox mounting type	**A, F, H or D**	see page 10/42

© Innomotics 2023

Selection and ordering data

P_N kW	n_2 rpm	T_2 Nm	i –	F_{R2} N	f_B –	m kg	Article No. (Article No. supplement, see below)	Additional identification code **-Z** with order code No. of poles
18.5	**FZ.109-LES180MQ4P**							
	163	1080	9.02	19400	1.9	277	**2KJ3307- ■ KL33- ■ ■ F1 -Z**	–
	185	950	7.94	19000	2.1	277	**2KJ3307- ■ KL33- ■ ■ E1 -Z**	–
	211	835	6.96	18500	2.3	277	**2KJ3307- ■ KL33- ■ ■ D1 -Z**	–
	242	730	6.07	18000	2.5	277	**2KJ3307- ■ KL33- ■ ■ C1 -Z**	–
	265	665	5.54	17700	2.6	277	**2KJ3307- ■ KL33- ■ ■ B1 -Z**	–
	308	570	4.77	17100	2.8	277	**2KJ3307- ■ KL33- ■ ■ A1 -Z**	–
	FZ.89-LES180MQ4P							
	87	2020	16.86	15600	0.91	238	**2KJ3306- ■ KL33- ■ ■ M1 -Z**	–
	99	1790	14.90	15700	1	238	**2KJ3306- ■ KL33- ■ ■ L1 -Z**	–
	112	1570	13.07	15700	1.2	238	**2KJ3306- ■ KL33- ■ ■ K1 -Z**	–
	129	1360	11.38	15700	1.4	238	**2KJ3306- ■ KL33- ■ ■ J1 -Z**	–
	151	1160	9.73	15500	1.6	238	**2KJ3306- ■ KL33- ■ ■ H1 -Z**	–
	176	1000	8.33	15200	1.7	238	**2KJ3306- ■ KL33- ■ ■ G1 -Z**	–
	193	910	7.60	14900	1.2	238	**2KJ3306- ■ KL33- ■ ■ F1 -Z**	–
	219	805	6.72	14600	1.4	238	**2KJ3306- ■ KL33- ■ ■ E1 -Z**	–
	249	705	5.90	14400	1.6	238	**2KJ3306- ■ KL33- ■ ■ D1 -Z**	–
	287	615	5.13	14100	1.8	238	**2KJ3306- ■ KL33- ■ ■ C1 -Z**	–
	335	525	4.39	13700	2	238	**2KJ3306- ■ KL33- ■ ■ B1 -Z**	–
	391	450	3.76	13300	2.2	238	**2KJ3306- ■ KL33- ■ ■ A1 -Z**	–
22	**FD.189-LES180ZLN4P**							
	8.9	23500	164.61	110000	0.81	781	**2KJ3412- ■ KN33- ■ ■ L1 -Z**	–
	10	20700	145.28	110900	0.92	781	**2KJ3412- ■ KN33- ■ ■ K1 -Z**	–
	11	18500	129.45	110900	1	781	**2KJ3412- ■ KN33- ■ ■ J1 -Z**	–
	13	16700	117.27	110900	1.1	781	**2KJ3412- ■ KN33- ■ ■ H1 -Z**	–
	14	15000	105.48	110900	1.3	781	**2KJ3412- ■ KN33- ■ ■ G1 -Z**	–
	17	12500	87.65	110900	1.5	781	**2KJ3412- ■ KN33- ■ ■ F1 -Z**	–
	19	11100	77.92	110900	1.7	781	**2KJ3412- ■ KN33- ■ ■ E1 -Z**	–
	24	8870	62.11	110900	2.1	781	**2KJ3412- ■ KN33- ■ ■ D1 -Z**	–
	FD.169-LES180ZLN4P							
	13	15900	111.30	73500	0.85	563	**2KJ3411- ■ KN33- ■ ■ J1 -Z**	–
	14	14600	102.18	73500	0.93	563	**2KJ3411- ■ KN33- ■ ■ H1 -Z**	–
	16	12800	90.03	73500	1.1	563	**2KJ3411- ■ KN33- ■ ■ G1 -Z**	–
	20	10500	73.85	73500	1.3	563	**2KJ3411- ■ KN33- ■ ■ F1 -Z**	–
	23	9250	64.75	73500	1.5	563	**2KJ3411- ■ KN33- ■ ■ E1 -Z**	–
	29	7230	50.63	73500	1.9	563	**2KJ3411- ■ KN33- ■ ■ D1 -Z**	–
	32	6650	46.55	72600	2	563	**2KJ3411- ■ KN33- ■ ■ C1 -Z**	–
	36	5830	40.82	71000	2.3	563	**2KJ3411- ■ KN33- ■ ■ B1 -Z**	–
	FZ.169-LES180ZLN4P							
	36	5870	41.07	71100	2.3	555	**2KJ3311- ■ KN33- ■ ■ R1 -Z**	–
	40	5280	36.94	69700	2.6	555	**2KJ3311- ■ KN33- ■ ■ Q1 -Z**	–
	FD.149-LES180ZLN4P							
	21	9820	68.76	44800	0.81	422	**2KJ3410- ■ KN33- ■ ■ F1 -Z**	–
	26	8050	56.37	45300	0.99	422	**2KJ3410- ■ KN33- ■ ■ E1 -Z**	–
	29	7140	50.01	45200	1.1	422	**2KJ3410- ■ KN33- ■ ■ D1 -Z**	–
	32	6470	45.30	45100	1.2	422	**2KJ3410- ■ KN33- ■ ■ C1 -Z**	–
	37	5630	39.43	44700	1.4	422	**2KJ3410- ■ KN33- ■ ■ B1 -Z**	–
	45	4620	32.33	43800	1.6	422	**2KJ3410- ■ KN33- ■ ■ A1 -Z**	–
	FZ.149-LES180ZLN4P							
	42	4990	34.93	44200	1.6	421	**2KJ3310- ■ KN33- ■ ■ Q1 -Z**	–
	47	4440	31.11	43600	1.8	421	**2KJ3310- ■ KN33- ■ ■ P1 -Z**	–
	53	3990	27.94	43000	2	421	**2KJ3310- ■ KN33- ■ ■ N1 -Z**	–

Article No. supplement		
Shaft design	**1 or 9**	see page 10/49
Frequency and voltage	**2 or 9**	see page 11/2
Gearbox mounting type	**A, F, H or D**	see page 10/42

© Innomotics 2023

Selection and ordering data

P_N kW	n_2 rpm	T_2 Nm	i –	F_{R2} N	f_B –	m kg	Article No. (Article No. supplement, see below)	Additional identification code **-Z** with order code No. of poles
22	**FZ.149-LES180ZLN4P**							
	59	3560	24.93	42300	2.2	421	**2KJ3310- ■ KN33- ■ ■ M1 -Z**	–
	66	3170	22.22	41500	2.5	421	**2KJ3310- ■ KN33- ■ ■ L1 -Z**	–
	75	2810	19.71	40700	2.8	421	**2KJ3310- ■ KN33- ■ ■ K1 -Z**	–
	81	2580	18.10	40000	3.1	421	**2KJ3310- ■ KN33- ■ ■ J1 -Z**	–
	FZ.129-LES180ZLN4P							
	50	4160	29.13	30300	1.2	333	**2KJ3308- ■ KN33- ■ ■ Q1 -Z**	–
	57	3700	25.93	30200	1.3	333	**2KJ3308- ■ KN33- ■ ■ P1 -Z**	–
	63	3320	23.23	29900	1.5	333	**2KJ3308- ■ KN33- ■ ■ N1 -Z**	–
	71	2940	20.60	29600	1.6	333	**2KJ3308- ■ KN33- ■ ■ M1 -Z**	–
	81	2590	18.18	29200	1.9	333	**2KJ3308- ■ KN33- ■ ■ L1 -Z**	–
	92	2280	15.99	28700	2.1	333	**2KJ3308- ■ KN33- ■ ■ K1 -Z**	–
	102	2070	14.48	28200	2.3	333	**2KJ3308- ■ KN33- ■ ■ J1 -Z**	–
	117	1800	12.61	27600	2.5	333	**2KJ3308- ■ KN33- ■ ■ H1 -Z**	–
	142	1470	10.34	26600	2.9	333	**2KJ3308- ■ KN33- ■ ■ G1 -Z**	–
	150	1400	9.80	26000	2.6	333	**2KJ3308- ■ KN33- ■ ■ F1 -Z**	–
	170	1230	8.65	25400	2.9	333	**2KJ3308- ■ KN33- ■ ■ E1 -Z**	–
	193	1080	7.60	24700	3.3	333	**2KJ3308- ■ KN33- ■ ■ D1 -Z**	–
	213	985	6.89	24200	3.7	333	**2KJ3308- ■ KN33- ■ ■ C1 -Z**	–
	245	855	6.00	23500	4.2	333	**2KJ3308- ■ KN33- ■ ■ B1 -Z**	–
	299	700	4.92	22400	4.3	333	**2KJ3308- ■ KN33- ■ ■ A1 -Z**	–
	FZ.109-LES180ZLN4P							
	59	3540	24.82	19600	0.87	282	**2KJ3307- ■ KN33- ■ ■ P1 -Z**	–
	68	3100	21.70	19800	1	282	**2KJ3307- ■ KN33- ■ ■ N1 -Z**	–
	76	2760	19.36	19900	1.1	282	**2KJ3307- ■ KN33- ■ ■ M1 -Z**	–
	86	2430	17.06	19900	1.3	282	**2KJ3307- ■ KN33- ■ ■ L1 -Z**	–
	98	2130	14.95	19800	1.5	282	**2KJ3307- ■ KN33- ■ ■ K1 -Z**	–
	113	1860	13.03	19600	1.7	282	**2KJ3307- ■ KN33- ■ ■ J1 -Z**	–
	124	1690	11.89	19500	1.8	282	**2KJ3307- ■ KN33- ■ ■ H1 -Z**	–
	144	1460	10.23	19100	2	282	**2KJ3307- ■ KN33- ■ ■ G1 -Z**	–
	163	1280	9.02	18700	1.6	282	**2KJ3307- ■ KN33- ■ ■ F1 -Z**	–
	185	1130	7.94	18400	1.8	282	**2KJ3307- ■ KN33- ■ ■ E1 -Z**	–
	211	995	6.96	18000	1.9	282	**2KJ3307- ■ KN33- ■ ■ D1 -Z**	–
	242	865	6.07	17500	2.1	282	**2KJ3307- ■ KN33- ■ ■ C1 -Z**	–
	265	790	5.54	17200	2.2	282	**2KJ3307- ■ KN33- ■ ■ B1 -Z**	–
	308	680	4.77	16700	2.4	282	**2KJ3307- ■ KN33- ■ ■ A1 -Z**	–
	FZ.89-LES180ZLN4P							
	99	2130	14.90	14300	0.87	243	**2KJ3306- ■ KN33- ■ ■ L1 -Z**	–
	112	1860	13.07	14500	0.99	243	**2KJ3306- ■ KN33- ■ ■ K1 -Z**	–
	129	1620	11.38	14600	1.1	243	**2KJ3306- ■ KN33- ■ ■ J1 -Z**	–
	151	1390	9.73	14600	1.3	243	**2KJ3306- ■ KN33- ■ ■ H1 -Z**	–
	176	1190	8.33	14500	1.5	243	**2KJ3306- ■ KN33- ■ ■ G1 -Z**	–
	193	1080	7.60	14100	1	243	**2KJ3306- ■ KN33- ■ ■ F1 -Z**	–
	219	960	6.72	14000	1.2	243	**2KJ3306- ■ KN33- ■ ■ E1 -Z**	–
	249	840	5.90	13800	1.3	243	**2KJ3306- ■ KN33- ■ ■ D1 -Z**	–
	287	730	5.13	13600	1.5	243	**2KJ3306- ■ KN33- ■ ■ C1 -Z**	–
	335	625	4.39	13200	1.7	243	**2KJ3306- ■ KN33- ■ ■ B1 -Z**	–
	391	535	3.76	12900	1.8	243	**2KJ3306- ■ KN33- ■ ■ A1 -Z**	–
30	**FD.189-LES200ZLU4P**							
	13	22800	117.27	110400	0.83	851	**2KJ3412- ■ LN33- ■ ■ H1 -Z**	–
	14	20500	105.48	110900	0.92	851	**2KJ3412- ■ LN33- ■ ■ G1 -Z**	–

Article No. supplement		
Shaft design	**1 or 9**	see page 10/49
Frequency and voltage	**2 or 9**	see page 11/2
Gearbox mounting type	**A, F, H or D**	see page 10/42

© Innomotics 2023

Selection and ordering data

P_N kW	n_2 rpm	T_2 Nm	i –	F_{R2} N	f_B –	m kg	Article No. (Article No. supplement, see below)	Additional identification code **-Z** with order code No. of poles
30	**FD.189-LES200ZLU4P**							
	17	17000	87.65	110900	1.1	851	**2KJ3412- ■ LN33- ■ ■ F1 -Z**	–
	19	15100	77.92	110200	1.3	851	**2KJ3412- ■ LN33- ■ ■ E1 -Z**	–
	24	12100	62.11	106800	1.6	851	**2KJ3412- ■ LN33- ■ ■ D1 -Z**	–
	30	9630	49.43	102900	2	851	**2KJ3412- ■ LN33- ■ ■ C1 -Z**	–
	36	7910	40.61	99200	2.4	851	**2KJ3412- ■ LN33- ■ ■ B1 -Z**	–
	FZ.189-LES200ZLU4P							
	39	7390	37.93	97900	2.6	830	**2KJ3312- ■ LN33- ■ ■ L1 -Z**	–
	FD.169-LES200ZLU4P							
	20	14300	73.85	69500	0.94	633	**2KJ3411- ■ LN33- ■ ■ F1 -Z**	–
	23	12600	64.75	69200	1.1	633	**2KJ3411- ■ LN33- ■ ■ E1 -Z**	–
	29	9860	50.63	68100	1.4	633	**2KJ3411- ■ LN33- ■ ■ D1 -Z**	–
	32	9070	46.55	67600	1.5	633	**2KJ3411- ■ LN33- ■ ■ C1 -Z**	–
	36	7950	40.82	66600	1.7	633	**2KJ3411- ■ LN33- ■ ■ B1 -Z**	–
	46	6220	31.92	64300	2.2	633	**2KJ3411- ■ LN33- ■ ■ A1 -Z**	–
	FZ.169-LES200ZLU4P							
	40	7200	36.94	65700	1.9	631	**2KJ3311- ■ LN33- ■ ■ Q1 -Z**	–
	45	6430	33.02	64600	2.1	631	**2KJ3311- ■ LN33- ■ ■ P1 -Z**	–
	49	5820	29.86	63600	2.3	631	**2KJ3311- ■ LN33- ■ ■ N1 -Z**	–
	56	5130	26.35	62200	2.6	631	**2KJ3311- ■ LN33- ■ ■ M1 -Z**	–
	63	4570	23.48	60900	3	631	**2KJ3311- ■ LN33- ■ ■ L1 -Z**	–
	FD.149-LES200ZLU4P							
	29	9740	50.01	38700	0.82	492	**2KJ3410- ■ LN33- ■ ■ D1 -Z**	–
	32	8820	45.30	39200	0.91	492	**2KJ3410- ■ LN33- ■ ■ C1 -Z**	–
	37	7680	39.43	39500	1	492	**2KJ3410- ■ LN33- ■ ■ B1 -Z**	–
	45	6300	32.33	39600	1.2	492	**2KJ3410- ■ LN33- ■ ■ A1 -Z**	–
	FZ.149-LES200ZLU4P							
	47	6060	31.11	39500	1.3	495	**2KJ3310- ■ LN33- ■ ■ P1 -Z**	–
	53	5440	27.94	39400	1.5	495	**2KJ3310- ■ LN33- ■ ■ N1 -Z**	–
	59	4850	24.93	39000	1.6	495	**2KJ3310- ■ LN33- ■ ■ M1 -Z**	–
	66	4330	22.22	38600	1.8	495	**2KJ3310- ■ LN33- ■ ■ L1 -Z**	–
	75	3840	19.71	38100	2.1	495	**2KJ3310- ■ LN33- ■ ■ K1 -Z**	–
	81	3520	18.10	37700	2.3	495	**2KJ3310- ■ LN33- ■ ■ J1 -Z**	–
	92	3100	15.94	37000	2.6	495	**2KJ3310- ■ LN33- ■ ■ H1 -Z**	–
	112	2540	13.08	35800	3	495	**2KJ3310- ■ LN33- ■ ■ G1 -Z**	–
	128	2230	11.47	35000	3.3	495	**2KJ3310- ■ LN33- ■ ■ F1 -Z**	–
	164	1740	8.97	33300	3.9	495	**2KJ3310- ■ LN33- ■ ■ E1 -Z**	–
	182	1570	8.09	32300	3.6	495	**2KJ3310- ■ LN33- ■ ■ D1 -Z**	–
	221	1290	6.64	31000	4.4	495	**2KJ3310- ■ LN33- ■ ■ C1 -Z**	–
	FZ.129-LES200ZLU4P							
	57	5050	25.93	26400	0.96	408	**2KJ3308- ■ LN33- ■ ■ P1 -Z**	–
	63	4520	23.23	26600	1.1	408	**2KJ3308- ■ LN33- ■ ■ N1 -Z**	–
	71	4010	20.60	26600	1.2	408	**2KJ3308- ■ LN33- ■ ■ M1 -Z**	–
	81	3540	18.18	26500	1.4	408	**2KJ3308- ■ LN33- ■ ■ L1 -Z**	–
	92	3110	15.99	26300	1.5	408	**2KJ3308- ■ LN33- ■ ■ K1 -Z**	–
	102	2820	14.48	26100	1.7	408	**2KJ3308- ■ LN33- ■ ■ J1 -Z**	–
	117	2450	12.61	25800	1.8	408	**2KJ3308- ■ LN33- ■ ■ H1 -Z**	–
	142	2010	10.34	25100	2.1	408	**2KJ3308- ■ LN33- ■ ■ G1 -Z**	–
	150	1910	9.80	24400	1.9	408	**2KJ3308- ■ LN33- ■ ■ F1 -Z**	–
	170	1680	8.65	24000	2.2	408	**2KJ3308- ■ LN33- ■ ■ E1 -Z**	–
	193	1480	7.60	23500	2.4	408	**2KJ3308- ■ LN33- ■ ■ D1 -Z**	–
	213	1340	6.89	23100	2.7	408	**2KJ3308- ■ LN33- ■ ■ C1 -Z**	–

Article No. supplement		
Shaft design	**1 or 9**	see page 10/49
Frequency and voltage	**2 or 9**	see page 11/2
Gearbox mounting type	**A, F, H or D**	see page 10/42

© Innomotics 2023

Selection and ordering data

P_N kW	n_2 rpm	T_2 Nm	i –	F_{R2} N	f_B –	m kg	Article No. (Article No. supplement, see below)	Additional identification code **-Z** with order code No. of poles
30	**FZ.129-LES200ZLU4P**							
	245	1160	6.00	22600	3.1	408	**2KJ3308- ■ LN33- ■ ■ B1 -Z**	–
	299	955	4.92	21700	3.2	408	**2KJ3308- ■ LN33- ■ ■ A1 -Z**	–
	FZ.109-LES200ZLU4P							
	76	3770	19.36	16600	0.82	357	**2KJ3307- ■ LN33- ■ ■ M1 -Z**	–
	86	3320	17.06	17000	0.93	357	**2KJ3307- ■ LN33- ■ ■ L1 -Z**	–
	98	2910	14.95	17300	1.1	357	**2KJ3307- ■ LN33- ■ ■ K1 -Z**	–
	113	2540	13.03	17400	1.2	357	**2KJ3307- ■ LN33- ■ ■ J1 -Z**	–
	124	2310	11.89	17500	1.3	357	**2KJ3307- ■ LN33- ■ ■ H1 -Z**	–
	144	1990	10.23	17400	1.4	357	**2KJ3307- ■ LN33- ■ ■ G1 -Z**	–
	163	1750	9.02	17200	1.2	357	**2KJ3307- ■ LN33- ■ ■ F1 -Z**	–
	185	1540	7.94	17000	1.3	357	**2KJ3307- ■ LN33- ■ ■ E1 -Z**	–
	211	1350	6.96	16800	1.4	357	**2KJ3307- ■ LN33- ■ ■ D1 -Z**	–
	242	1180	6.07	16500	1.5	357	**2KJ3307- ■ LN33- ■ ■ C1 -Z**	–
	265	1080	5.54	16300	1.6	357	**2KJ3307- ■ LN33- ■ ■ B1 -Z**	–
	308	930	4.77	15900	1.7	357	**2KJ3307- ■ LN33- ■ ■ A1 -Z**	–
37	**FD.189-LES225SD4P**							
	17	20900	87.65	103900	0.91	901	**2KJ3412- ■ MF33- ■ ■ F1 -Z**	–
	19	18600	77.92	103300	1	901	**2KJ3412- ■ MF33- ■ ■ E1 -Z**	–
	24	14800	62.11	101400	1.3	901	**2KJ3412- ■ MF33- ■ ■ D1 -Z**	–
	30	11800	49.43	98600	1.6	901	**2KJ3412- ■ MF33- ■ ■ C1 -Z**	–
	36	9700	40.61	95600	2	901	**2KJ3412- ■ MF33- ■ ■ B1 -Z**	–
	46	7720	32.32	91800	2.5	901	**2KJ3412- ■ MF33- ■ ■ A1 -Z**	–
	FZ.189-LES225SD4P							
	39	9060	37.93	94500	2.1	873	**2KJ3312- ■ MF33- ■ ■ L1 -Z**	–
	43	8130	34.03	92700	2.3	873	**2KJ3312- ■ MF33- ■ ■ K1 -Z**	–
	49	7270	30.41	90800	2.6	873	**2KJ3312- ■ MF33- ■ ■ J1 -Z**	–
	54	6490	27.17	88800	2.9	873	**2KJ3312- ■ MF33- ■ ■ H1 -Z**	–
	FD.169-LES225SD4P							
	23	15400	64.75	63200	0.88	689	**2KJ3411- ■ MF33- ■ ■ E1 -Z**	–
	29	12100	50.63	63300	1.1	689	**2KJ3411- ■ MF33- ■ ■ D1 -Z**	–
	32	11100	46.55	63200	1.2	689	**2KJ3411- ■ MF33- ■ ■ C1 -Z**	–
	36	9750	40.82	62700	1.4	689	**2KJ3411- ■ MF33- ■ ■ B1 -Z**	–
	46	7630	31.92	61200	1.8	689	**2KJ3411- ■ MF33- ■ ■ A1 -Z**	–
	FZ.169-LES225SD4P							
	45	7890	33.02	61400	1.7	674	**2KJ3311- ■ MF33- ■ ■ P1 -Z**	–
	49	7130	29.86	60700	1.9	674	**2KJ3311- ■ MF33- ■ ■ N1 -Z**	–
	56	6300	26.35	59700	2.2	674	**2KJ3311- ■ MF33- ■ ■ M1 -Z**	–
	63	5610	23.48	58600	2.4	674	**2KJ3311- ■ MF33- ■ ■ L1 -Z**	–
	69	5080	21.27	57700	2.7	674	**2KJ3311- ■ MF33- ■ ■ K1 -Z**	–
	77	4570	19.13	56600	3	674	**2KJ3311- ■ MF33- ■ ■ J1 -Z**	–
	183	1920	8.07	46200	4.3	674	**2KJ3311- ■ MF33- ■ ■ D1 -Z**	–
	FD.149-LES225SD4P							
	37	9420	39.43	35100	0.85	545	**2KJ3410- ■ MF33- ■ ■ B1 -Z**	–
	46	7720	32.33	35900	0.97	545	**2KJ3410- ■ MF33- ■ ■ A1 -Z**	–
	FZ.149-LES225SD4P							
	53	6680	27.94	36200	1.2	540	**2KJ3310- ■ MF33- ■ ■ N1 -Z**	–
	59	5960	24.93	36200	1.3	540	**2KJ3310- ■ MF33- ■ ■ M1 -Z**	–
	67	5310	22.22	36100	1.5	540	**2KJ3310- ■ MF33- ■ ■ L1 -Z**	–
	75	4710	19.71	35800	1.7	540	**2KJ3310- ■ MF33- ■ ■ K1 -Z**	–
	82	4320	18.10	35600	1.8	540	**2KJ3310- ■ MF33- ■ ■ J1 -Z**	–
	93	3810	15.94	35100	2.1	540	**2KJ3310- ■ MF33- ■ ■ H1 -Z**	–

Article No. supplement		
Shaft design	**1 or 9**	see page 10/49
Frequency and voltage	**2 or 9**	see page 11/2
Gearbox mounting type	**A, F, H or D**	see page 10/42

© Innomotics 2023

Selection and ordering data

P_N kW	n_2 rpm	T_2 Nm	i –	F_{R2} N	f_B –	m kg	Article No. (Article No. supplement, see below)	Additional identification code **-Z** with order code No. of poles
37	**FZ.149-LES225SD4P**							
	113	3120	13.08	34300	2.4	540	**2KJ3310- ■ MF33- ■ ■ G1 -Z**	–
	129	2740	11.47	33600	2.7	540	**2KJ3310- ■ MF33- ■ ■ F1 -Z**	–
	165	2140	8.97	32200	3.2	540	**2KJ3310- ■ MF33- ■ ■ E1 -Z**	–
	183	1930	8.09	31300	2.9	540	**2KJ3310- ■ MF33- ■ ■ D1 -Z**	–
	223	1580	6.64	30100	3.6	540	**2KJ3310- ■ MF33- ■ ■ C1 -Z**	–
	254	1390	5.82	29300	4.1	540	**2KJ3310- ■ MF33- ■ ■ B1 -Z**	–
	FZ.129-LES225SD4P							
	64	5550	23.23	23600	0.87	451	**2KJ3308- ■ MF33- ■ ■ N1 -Z**	–
	72	4920	20.60	24000	0.98	451	**2KJ3308- ■ MF33- ■ ■ M1 -Z**	–
	81	4340	18.18	24200	1.1	451	**2KJ3308- ■ MF33- ■ ■ L1 -Z**	–
	92	3820	15.99	24300	1.3	451	**2KJ3308- ■ MF33- ■ ■ K1 -Z**	–
	102	3460	14.48	24300	1.4	451	**2KJ3308- ■ MF33- ■ ■ J1 -Z**	–
	117	3010	12.61	24200	1.5	451	**2KJ3308- ■ MF33- ■ ■ H1 -Z**	–
	143	2470	10.34	23800	1.7	451	**2KJ3308- ■ MF33- ■ ■ G1 -Z**	–
	151	2340	9.80	23100	1.5	451	**2KJ3308- ■ MF33- ■ ■ F1 -Z**	–
	171	2060	8.65	22800	1.8	451	**2KJ3308- ■ MF33- ■ ■ E1 -Z**	–
	194	1810	7.60	22500	2	451	**2KJ3308- ■ MF33- ■ ■ D1 -Z**	–
	215	1640	6.89	22200	2.2	451	**2KJ3308- ■ MF33- ■ ■ C1 -Z**	–
	246	1430	6.00	21700	2.5	451	**2KJ3308- ■ MF33- ■ ■ B1 -Z**	–
	300	1170	4.92	21000	2.6	451	**2KJ3308- ■ MF33- ■ ■ A1 -Z**	–
	FZ.109-LES225SD4P							
	99	3570	14.95	15100	0.87	399	**2KJ3307- ■ MF33- ■ ■ K1 -Z**	–
	113	3110	13.03	15500	1	399	**2KJ3307- ■ MF33- ■ ■ J1 -Z**	–
	124	2840	11.89	15700	1.1	399	**2KJ3307- ■ MF33- ■ ■ H1 -Z**	–
	144	2440	10.23	15900	1.2	399	**2KJ3307- ■ MF33- ■ ■ G1 -Z**	–
	164	2150	9.02	15800	0.97	399	**2KJ3307- ■ MF33- ■ ■ F1 -Z**	–
	186	1890	7.94	15800	1.1	399	**2KJ3307- ■ MF33- ■ ■ E1 -Z**	–
	212	1660	6.96	15700	1.1	399	**2KJ3307- ■ MF33- ■ ■ D1 -Z**	–
	243	1450	6.07	15500	1.2	399	**2KJ3307- ■ MF33- ■ ■ C1 -Z**	–
	267	1320	5.54	15400	1.3	399	**2KJ3307- ■ MF33- ■ ■ B1 -Z**	–
	310	1140	4.77	15200	1.4	399	**2KJ3307- ■ MF33- ■ ■ A1 -Z**	–
45	**FD.189-LES225YMF4P**							
	19	22600	77.92	95700	0.84	946	**2KJ3412- ■ MT33- ■ ■ E1 -Z**	–
	24	18000	62.11	95300	1.1	946	**2KJ3412- ■ MT33- ■ ■ D1 -Z**	–
	30	14300	49.43	93800	1.3	946	**2KJ3412- ■ MT33- ■ ■ C1 -Z**	–
	36	11800	40.61	91600	1.6	946	**2KJ3412- ■ MT33- ■ ■ B1 -Z**	–
	46	9390	32.32	88700	2	946	**2KJ3412- ■ MT33- ■ ■ A1 -Z**	–
	FZ.189-LES225YMF4P							
	39	11000	37.93	90800	1.7	918	**2KJ3312- ■ MT33- ■ ■ L1 -Z**	–
	43	9890	34.03	89400	1.9	918	**2KJ3312- ■ MT33- ■ ■ K1 -Z**	–
	49	8840	30.41	87800	2.1	918	**2KJ3312- ■ MT33- ■ ■ J1 -Z**	–
	54	7900	27.17	86100	2.4	918	**2KJ3312- ■ MT33- ■ ■ H1 -Z**	–
	59	7220	24.85	84700	2.6	918	**2KJ3312- ■ MT33- ■ ■ G1 -Z**	–
	67	6420	22.09	82800	3	918	**2KJ3312- ■ MT33- ■ ■ F1 -Z**	–
	FD.169-LES225YMF4P							
	29	14700	50.63	57800	0.92	734	**2KJ3411- ■ MT33- ■ ■ D1 -Z**	–
	32	13500	46.55	58100	1	734	**2KJ3411- ■ MT33- ■ ■ C1 -Z**	–
	36	11800	40.82	58400	1.1	734	**2KJ3411- ■ MT33- ■ ■ B1 -Z**	–
	46	9280	31.92	57700	1.5	734	**2KJ3411- ■ MT33- ■ ■ A1 -Z**	–

Article No. supplement		
Shaft design	**1 or 9**	see page 10/49
Frequency and voltage	**2 or 9**	see page 11/2
Gearbox mounting type	**A, F, H or D**	see page 10/42

© Innomotics 2023

Selection and ordering data

P_N kW	n_2 rpm	T_2 Nm	i –	F_{R2} N	f_B –	m kg	Article No. (Article No. supplement, see below)	Additional identification code **-Z** with order code No. of poles
45	**FZ.169-LES225YMF4P**							
	45	9600	33.02	57800	1.4	719	**2KJ3311- ■ MT33- ■ ■ P1 -Z**	–
	49	8680	29.86	57500	1.6	719	**2KJ3311- ■ MT33- ■ ■ N1 -Z**	–
	56	7660	26.35	56800	1.8	719	**2KJ3311- ■ MT33- ■ ■ M1 -Z**	–
	63	6820	23.48	56100	2	719	**2KJ3311- ■ MT33- ■ ■ L1 -Z**	–
	69	6180	21.27	55400	2.2	719	**2KJ3311- ■ MT33- ■ ■ K1 -Z**	–
	77	5560	19.13	54500	2.4	719	**2KJ3311- ■ MT33- ■ ■ J1 -Z**	–
	93	4620	15.90	52900	2.9	719	**2KJ3311- ■ MT33- ■ ■ H1 -Z**	–
	105	4100	14.13	51800	3.1	719	**2KJ3311- ■ MT33- ■ ■ G1 -Z**	–
	131	3270	11.26	49600	3.6	719	**2KJ3311- ■ MT33- ■ ■ F1 -Z**	–
	165	2600	8.97	47300	4	719	**2KJ3311- ■ MT33- ■ ■ E1 -Z**	–
	183	2340	8.07	45200	3.6	719	**2KJ3311- ■ MT33- ■ ■ D1 -Z**	–
	206	2080	7.18	44100	4	719	**2KJ3311- ■ MT33- ■ ■ C1 -Z**	–
	FD.149-LES225YMF4P							
	46	9400	32.33	31700	0.8	590	**2KJ3410- ■ MT33- ■ ■ A1 -Z**	–
	FZ.149-LES225YMF4P							
	53	8120	27.94	32600	0.98	585	**2KJ3310- ■ MT33- ■ ■ N1 -Z**	–
	59	7240	24.93	33000	1.1	585	**2KJ3310- ■ MT33- ■ ■ M1 -Z**	–
	67	6460	22.22	33200	1.2	585	**2KJ3310- ■ MT33- ■ ■ L1 -Z**	–
	75	5730	19.71	33300	1.4	585	**2KJ3310- ■ MT33- ■ ■ K1 -Z**	–
	82	5260	18.10	33300	1.5	585	**2KJ3310- ■ MT33- ■ ■ J1 -Z**	–
	93	4630	15.94	33100	1.7	585	**2KJ3310- ■ MT33- ■ ■ H1 -Z**	–
	113	3800	13.08	32600	2	585	**2KJ3310- ■ MT33- ■ ■ G1 -Z**	–
	129	3330	11.47	32100	2.2	585	**2KJ3310- ■ MT33- ■ ■ F1 -Z**	–
	165	2600	8.97	31100	2.6	585	**2KJ3310- ■ MT33- ■ ■ E1 -Z**	–
	183	2350	8.09	30200	2.4	585	**2KJ3310- ■ MT33- ■ ■ D1 -Z**	–
	223	1930	6.64	29200	2.9	585	**2KJ3310- ■ MT33- ■ ■ C1 -Z**	–
	254	1690	5.82	28500	3.4	585	**2KJ3310- ■ MT33- ■ ■ B1 -Z**	–
	325	1320	4.55	27100	4.3	585	**2KJ3310- ■ MT33- ■ ■ A1 -Z**	–
	FZ.129-LES225YMF4P							
	72	5990	20.60	21000	0.81	496	**2KJ3308- ■ MT33- ■ ■ M1 -Z**	–
	81	5280	18.18	21600	0.92	496	**2KJ3308- ■ MT33- ■ ■ L1 -Z**	–
	92	4640	15.99	22000	1	496	**2KJ3308- ■ MT33- ■ ■ K1 -Z**	–
	102	4210	14.48	22200	1.1	496	**2KJ3308- ■ MT33- ■ ■ J1 -Z**	–
	117	3660	12.61	22300	1.2	496	**2KJ3308- ■ MT33- ■ ■ H1 -Z**	–
	143	3000	10.34	22300	1.4	496	**2KJ3308- ■ MT33- ■ ■ G1 -Z**	–
	151	2840	9.80	21600	1.3	496	**2KJ3308- ■ MT33- ■ ■ F1 -Z**	–
	171	2510	8.65	21400	1.4	496	**2KJ3308- ■ MT33- ■ ■ E1 -Z**	–
	194	2210	7.60	21300	1.6	496	**2KJ3308- ■ MT33- ■ ■ D1 -Z**	–
	215	2000	6.89	21100	1.8	496	**2KJ3308- ■ MT33- ■ ■ C1 -Z**	–
	246	1740	6.00	20800	2.1	496	**2KJ3308- ■ MT33- ■ ■ B1 -Z**	–
	300	1430	4.92	20200	2.1	496	**2KJ3308- ■ MT33- ■ ■ A1 -Z**	–
	FZ.109-LES225YMF4P							
	113	3780	13.03	13300	0.82	444	**2KJ3307- ■ MT33- ■ ■ J1 -Z**	–
	124	3450	11.89	13700	0.89	444	**2KJ3307- ■ MT33- ■ ■ H1 -Z**	–
	144	2970	10.23	14200	0.97	444	**2KJ3307- ■ MT33- ■ ■ G1 -Z**	–
	164	2620	9.02	14200	0.8	444	**2KJ3307- ■ MT33- ■ ■ F1 -Z**	–
	186	2300	7.94	14400	0.87	444	**2KJ3307- ■ MT33- ■ ■ E1 -Z**	–
	212	2020	6.96	14500	0.94	444	**2KJ3307- ■ MT33- ■ ■ D1 -Z**	–
	243	1760	6.07	14500	1	444	**2KJ3307- ■ MT33- ■ ■ C1 -Z**	–
	267	1610	5.54	14500	1.1	444	**2KJ3307- ■ MT33- ■ ■ B1 -Z**	–
	310	1380	4.77	14300	1.2	444	**2KJ3307- ■ MT33- ■ ■ A1 -Z**	–

Article No. supplement		
Shaft design	**1 or 9**	see page 10/49
Frequency and voltage	**2 or 9**	see page 11/2
Gearbox mounting type	**A, F, H or D**	see page 10/42

© Innomotics 2023

Selection and ordering data

P_N kW	n_2 rpm	T_2 Nm	i –	F_{R2} N	f_B –	m kg	Article No. (Article No. supplement, see below)	Additional identification code **-Z** with order code No. of poles
55	**FD.189-LES250MD4P**							
	24	22000	62.11	87600	0.86	1049	**2KJ3412- ■ NM33- ■ ■ D1 -Z**	–
	30	17500	49.43	87600	1.1	1049	**2KJ3412- ■ NM33- ■ ■ C1 -Z**	–
	36	14300	40.61	86800	1.3	1049	**2KJ3412- ■ NM33- ■ ■ B1 -Z**	–
	46	11400	32.32	84700	1.7	1049	**2KJ3412- ■ NM33- ■ ■ A1 -Z**	–
	FZ.189-LES250MD4P							
	49	10700	30.41	84100	1.8	1021	**2KJ3312- ■ NM33- ■ ■ J1 -Z**	–
	55	9630	27.17	82700	2	1021	**2KJ3312- ■ NM33- ■ ■ H1 -Z**	–
	60	8800	24.85	81600	2.2	1021	**2KJ3312- ■ NM33- ■ ■ G1 -Z**	–
	67	7820	22.09	80100	2.4	1021	**2KJ3312- ■ NM33- ■ ■ F1 -Z**	–
	79	6640	18.75	77800	2.9	1021	**2KJ3312- ■ NM33- ■ ■ E1 -Z**	–
	91	5740	16.21	75600	3.3	1021	**2KJ3312- ■ NM33- ■ ■ D1 -Z**	–
	FD.169-LES250MD4P							
	32	16400	46.55	52000	0.82	838	**2KJ3411- ■ NM33- ■ ■ C1 -Z**	–
	36	14400	40.82	52900	0.94	838	**2KJ3411- ■ NM33- ■ ■ B1 -Z**	–
	46	11300	31.92	53400	1.2	838	**2KJ3411- ■ NM33- ■ ■ A1 -Z**	–
	FZ.169-LES250MD4P							
	56	9330	26.35	53300	1.5	822	**2KJ3311- ■ NM33- ■ ■ M1 -Z**	–
	63	8320	23.48	52900	1.6	822	**2KJ3311- ■ NM33- ■ ■ L1 -Z**	–
	70	7530	21.27	52500	1.8	822	**2KJ3311- ■ NM33- ■ ■ K1 -Z**	–
	77	6780	19.13	51900	2	822	**2KJ3311- ■ NM33- ■ ■ J1 -Z**	–
	93	5630	15.90	50800	2.4	822	**2KJ3311- ■ NM33- ■ ■ H1 -Z**	–
	105	5000	14.13	49900	2.6	822	**2KJ3311- ■ NM33- ■ ■ G1 -Z**	–
	132	3990	11.26	48000	2.9	822	**2KJ3311- ■ NM33- ■ ■ F1 -Z**	–
	165	3170	8.97	46000	3.3	822	**2KJ3311- ■ NM33- ■ ■ E1 -Z**	–
	184	2860	8.07	43800	2.9	822	**2KJ3311- ■ NM33- ■ ■ D1 -Z**	–
	206	2540	7.18	42900	3.3	822	**2KJ3311- ■ NM33- ■ ■ C1 -Z**	–
	259	2020	5.72	40900	4	822	**2KJ3311- ■ NM33- ■ ■ B1 -Z**	–
	326	1610	4.55	38900	4.5	822	**2KJ3311- ■ NM33- ■ ■ A1 -Z**	–
	FZ.149-LES250MD4P							
	67	7870	22.22	29600	1	687	**2KJ3310- ■ NM33- ■ ■ L1 -Z**	–
	75	6980	19.71	30100	1.1	687	**2KJ3310- ■ NM33- ■ ■ K1 -Z**	–
	82	6410	18.10	30300	1.2	687	**2KJ3310- ■ NM33- ■ ■ J1 -Z**	–
	93	5640	15.94	30500	1.4	687	**2KJ3310- ■ NM33- ■ ■ H1 -Z**	–
	113	4630	13.08	30500	1.6	687	**2KJ3310- ■ NM33- ■ ■ G1 -Z**	–
	129	4060	11.47	30300	1.8	687	**2KJ3310- ■ NM33- ■ ■ F1 -Z**	–
	165	3170	8.97	29600	2.1	687	**2KJ3310- ■ NM33- ■ ■ E1 -Z**	–
	183	2860	8.09	28800	2	687	**2KJ3310- ■ NM33- ■ ■ D1 -Z**	–
	223	2350	6.64	28000	2.4	687	**2KJ3310- ■ NM33- ■ ■ C1 -Z**	–
	255	2060	5.82	27500	2.8	687	**2KJ3310- ■ NM33- ■ ■ B1 -Z**	–
	326	1610	4.55	26300	3.5	687	**2KJ3310- ■ NM33- ■ ■ A1 -Z**	–
	FZ.129-LES250MD4P							
	93	5660	15.99	19200	0.85	598	**2KJ3308- ■ NM33- ■ ■ K1 -Z**	–
	102	5130	14.48	19600	0.91	598	**2KJ3308- ■ NM33- ■ ■ J1 -Z**	–
	118	4460	12.61	20100	1	598	**2KJ3308- ■ NM33- ■ ■ H1 -Z**	–
	143	3660	10.34	20400	1.2	598	**2KJ3308- ■ NM33- ■ ■ G1 -Z**	–
	171	3060	8.65	19800	1.2	598	**2KJ3308- ■ NM33- ■ ■ E1 -Z**	–
	195	2690	7.60	19800	1.3	598	**2KJ3308- ■ NM33- ■ ■ D1 -Z**	–
	215	2440	6.89	19700	1.5	598	**2KJ3308- ■ NM33- ■ ■ C1 -Z**	–
	247	2120	6.00	19600	1.7	598	**2KJ3308- ■ NM33- ■ ■ B1 -Z**	–
	301	1740	4.92	19200	1.7	598	**2KJ3308- ■ NM33- ■ ■ A1 -Z**	–

Article No. supplement		
Shaft design	**1 or 9**	see page 10/49
Frequency and voltage	**2 or 9**	see page 11/2
Gearbox mounting type	**A, F, H or D**	see page 10/42

© Innomotics 2023

Transmission ratios and torques

Selection and ordering data

i –	n_2 rpm	T_{2N} Nm	F_{R2} N	φ [1)] ‘	J_G 10^{-4} kgm²	R_{ex} –	Motor frame size 63	71	80	90	100	112	132	160	180	200	225	250	Article No. (Article No. supplement, see below)
FZ.29																			
56.73	26	150	5220	7.6	0.04	851/15	✓	✓											**2KJ3301 - ■■■■■ - ■■C2**
50.32	29	150	5220	8.0	0.05	1258/25	✓	✓	✓	✓									**2KJ3301 - ■■■■■ - ■■B2**
43.66	33	150	5220	8.0	0.06	2183/50	✓	✓	✓	✓									**2KJ3301 - ■■■■■ - ■■A2**
39.69	37	150	5220	8.0	0.08	2183/55	✓	✓	✓	✓									**2KJ3301 - ■■■■■ - ■■X1**
34.04	43	150	4910	8.1	0.10	851/25	✓	✓	✓	✓									**2KJ3301 - ■■■■■ - ■■W1**
30.95	47	150	4720	8.1	0.12	1702/55	✓	✓	✓	✓									**2KJ3301 - ■■■■■ - ■■V1**
27.13	53	150	4460	8.2	0.14	407/15	✓	✓	✓	✓	✓								**2KJ3301 - ■■■■■ - ■■U1**
24.22	60	150	4250	8.3	0.17	1332/55	✓	✓	✓	✓	✓								**2KJ3301 - ■■■■■ - ■■T1**
21.58	67	150	4040	8.4	0.20	259/12	✓	✓	✓	✓	✓								**2KJ3301 - ■■■■■ - ■■S1**
19.92	73	150	3910	8.4	0.24	259/13	✓	✓	✓	✓	✓								**2KJ3301 - ■■■■■ - ■■R1**
17.44	83	150	3680	8.6	0.28	1221/70	✓	✓	✓	✓	✓								**2KJ3301 - ■■■■■ - ■■Q1**
15.29	95	150	3470	8.8	0.30	1147/75	✓	✓	✓	✓	✓								**2KJ3301 - ■■■■■ - ■■P1**
13.88	104	150	3320	8.9	0.38	111/8	✓	✓	✓	✓	✓								**2KJ3301 - ■■■■■ - ■■N1**
13.06	111	150	3230	8.9	0.44	222/17	✓	✓	✓	✓	✓								**2KJ3301 - ■■■■■ - ■■M1**
11.51	126	143	3100	8.6	0.50	518/45	✓	✓	✓	✓	✓								**2KJ3301 - ■■■■■ - ■■L1**
9.99	145	136	2960	8.8	0.67	999/100	✓	✓	✓	✓	✓								**2KJ3301 - ■■■■■ - ■■K1**
9.69	150	143	2660	13.8	0.26	2664/275	✓	✓	✓	✓	✓								**2KJ3301 - ■■■■■ - ■■J1**
8.63	168	130	2640	14.0	0.32	259/30	✓	✓	✓	✓	✓								**2KJ3301 - ■■■■■ - ■■H1**
7.97	182	120	2630	14.0	0.38	518/65	✓	✓	✓	✓	✓								**2KJ3301 - ■■■■■ - ■■G1**
6.98	208	123	2440	14.5	0.46	1221/175	✓	✓	✓	✓	✓								**2KJ3301 - ■■■■■ - ■■F1**
6.12	237	114	2370	15.0	0.53	2294/375	✓	✓	✓	✓	✓								**2KJ3301 - ■■■■■ - ■■E1**
5.55	261	108	2320	15.3	0.66	111/20	✓	✓	✓	✓	✓								**2KJ3301 - ■■■■■ - ■■D1**
5.22	278	106	2300	15.3	0.76	444/85	✓	✓	✓	✓	✓								**2KJ3301 - ■■■■■ - ■■C1**
4.60	315	97	2280	15.3	0.92	1036/225	✓	✓	✓	✓	✓								**2KJ3301 - ■■■■■ - ■■B1**
4.00	362	91	2250	15.0	1.21	999/250	✓	✓	✓	✓	✓								**2KJ3301 - ■■■■■ - ■■A1**
FD.29																			
298.58	4.9	150	5220	7.9	0.02	94054/315	✓	✓											**2KJ3401 - ■■■■■ - ■■Q1**
264.39	5.5	150	5220	8.0	0.03	92537/350	✓	✓	✓	✓									**2KJ3401 - ■■■■■ - ■■P1**
229.72	6.3	150	5220	8.0	0.04	80401/350	✓	✓	✓	✓									**2KJ3401 - ■■■■■ - ■■N1**
208.83	6.9	150	5220	8.0	0.05	80401/385	✓	✓	✓	✓									**2KJ3401 - ■■■■■ - ■■M1**
177.71	8.2	150	5220	8.0	0.06	62197/350	✓	✓	✓	✓									**2KJ3401 - ■■■■■ - ■■L1**
161.55	9	150	5220	8.0	0.08	62197/385	✓	✓	✓	✓									**2KJ3401 - ■■■■■ - ■■K1**
140.86	10	150	5220	8.0	0.09	19721/140	✓	✓	✓	✓	✓								**2KJ3401 - ■■■■■ - ■■J1**
126.09	11	150	5220	8.0	0.12	48544/385	✓	✓	✓	✓	✓								**2KJ3401 - ■■■■■ - ■■H1**
111.97	13	150	5220	8.0	0.14	47027/420	✓	✓	✓	✓	✓								**2KJ3401 - ■■■■■ - ■■G1**
103.36	14	150	5220	8.0	0.17	47027/455	✓	✓	✓	✓	✓								**2KJ3401 - ■■■■■ - ■■F1**
89.78	16	150	5220	8.1	0.19	43993/490	✓	✓	✓	✓	✓								**2KJ3401 - ■■■■■ - ■■E1**
78.02	19	150	5220	8.0	0.19	13653/175	✓	✓	✓	✓	✓								**2KJ3401 - ■■■■■ - ■■D1**
70.43	21	150	5220	8.1	0.25	19721/280	✓	✓	✓	✓	✓								**2KJ3401 - ■■■■■ - ■■C1**
66.29	22	150	5220	8.1	0.29	39442/595	✓	✓	✓	✓	✓								**2KJ3401 - ■■■■■ - ■■B1**
57.79	25	150	5220	8.1	0.33	6068/105	✓	✓	✓	✓	✓								**2KJ3401 - ■■■■■ - ■■A1**

Article No. supplement		
Shaft design	**1 or 9**	see page 10/49
Motor frame size, motor type, efficiency class		see chapter 9
Frequency and voltage	**2 or 9**	see page 11/2
Gearbox mounting type	**A, F, H or D**	see page 10/42

1) Only in conjunction with reduced-backlash version

© Innomotics 2023

Selection and ordering data

i –	n_2 rpm	T_{2N} Nm	F_{R2} N	φ[1] ‘	J_G 10^{-4} kgm²	R_{ex} –	Motor frame size 63	71	80	90	100	112	132	160	180	200	225	250	Article No. (Article No. supplement, see below)
FZ.39																			
65.21	22	290	6040	6.3	0.06	913/14	✓	✓											**2KJ3302 - ■■■■■ - ■■B2**
57.99	25	230	6000	6.6	0.08	4059/70	✓	✓	✓	✓									**2KJ3302 - ■■■■■ - ■■A2**
50.91	28	240	5950	6.6	0.09	1782/35	✓	✓	✓	✓									**2KJ3302 - ■■■■■ - ■■X1**
46.29	31	255	5820	6.6	0.11	324/7	✓	✓	✓	✓									**2KJ3302 - ■■■■■ - ■■W1**
39.60	37	290	5950	6.7	0.13	198/5	✓	✓	✓	✓									**2KJ3302 - ■■■■■ - ■■V1**
36.00	40	255	5480	6.7	0.16	36/1	✓	✓	✓	✓									**2KJ3302 - ■■■■■ - ■■U1**
31.82	46	285	5320	6.8	0.19	891/28	✓	✓	✓	✓	✓	✓							**2KJ3302 - ■■■■■ - ■■T1**
28.93	50	275	5080	6.8	0.26	405/14	✓	✓	✓	✓	✓	✓							**2KJ3302 - ■■■■■ - ■■S1**
25.34	57	265	4930	6.9	0.30	1419/56	✓	✓	✓	✓	✓	✓							**2KJ3302 - ■■■■■ - ■■R1**
23.39	62	260	4730	6.9	0.36	4257/182	✓	✓	✓	✓	✓	✓							**2KJ3302 - ■■■■■ - ■■Q1**
20.71	70	250	4730	7.0	0.42	4059/196	✓	✓	✓	✓	✓	✓							**2KJ3302 - ■■■■■ - ■■P1**
17.24	84	235	4450	7.2	0.57	3861/224	✓	✓	✓	✓	✓	✓							**2KJ3302 - ■■■■■ - ■■N1**
16.22	89	230	4360	7.2	0.66	3861/238	✓	✓	✓	✓	✓	✓							**2KJ3302 - ■■■■■ - ■■M1**
14.54	100	220	4220	7.3	0.74	407/28	✓	✓	✓	✓	✓	✓							**2KJ3302 - ■■■■■ - ■■L1**
12.38	117	210	3990	7.5	0.97	99/8	✓	✓	✓	✓	✓	✓							**2KJ3302 - ■■■■■ - ■■K1**
10.61	137	199	3790	7.7	1.28	297/28			✓	✓	✓	✓							**2KJ3302 - ■■■■■ - ■■J1**
9.13	159	189	3610	7.9	1.65	1023/112			✓	✓	✓	✓							**2KJ3302 - ■■■■■ - ■■H1**
8.10	179	167	3430	12.1	0.70	3403/420	✓	✓	✓	✓	✓	✓							**2KJ3302 - ■■■■■ - ■■G1**
6.74	215	152	3270	12.5	0.96	1079/160	✓	✓	✓	✓	✓	✓							**2KJ3302 - ■■■■■ - ■■F1**
6.35	228	149	3200	12.5	1.11	1079/170	✓	✓	✓	✓	✓	✓							**2KJ3302 - ■■■■■ - ■■E1**
5.69	255	140	3120	12.9	1.29	3071/540	✓	✓	✓	✓	✓	✓							**2KJ3302 - ■■■■■ - ■■D1**
4.84	300	128	3000	13.4	1.73	581/120	✓	✓	✓	✓	✓	✓							**2KJ3302 - ■■■■■ - ■■C1**
4.15	349	118	2950	13.9	2.30	83/20			✓	✓	✓	✓							**2KJ3302 - ■■■■■ - ■■B1**
3.57	406	108	2890	14.5	3.00	2573/720			✓	✓	✓	✓							**2KJ3302 - ■■■■■ - ■■A1**
FD.39																			
274.26	5.3	290	5820	6.9	0.04	32637/119	✓	✓											**2KJ3402 - ■■■■■ - ■■R1**
243.26	6	290	5820	7.0	0.05	8514/35	✓	✓	✓	✓									**2KJ3402 - ■■■■■ - ■■Q1**
211.06	6.9	290	5820	7.0	0.06	251163/1190	✓	✓	✓	✓									**2KJ3402 - ■■■■■ - ■■P1**
191.87	7.6	290	5820	7.0	0.07	22833/119	✓	✓	✓	✓									**2KJ3402 - ■■■■■ - ■■N1**
164.56	8.8	290	5820	7.0	0.09	97911/595	✓	✓	✓	✓									**2KJ3402 - ■■■■■ - ■■M1**
149.60	9.7	290	5820	7.0	0.11	17802/119	✓	✓	✓	✓									**2KJ3402 - ■■■■■ - ■■L1**
131.17	11	290	5820	7.0	0.12	15609/119	✓	✓	✓	✓	✓	✓							**2KJ3402 - ■■■■■ - ■■K1**
117.08	12	290	5820	7.0	0.15	13932/119	✓	✓	✓	✓	✓	✓							**2KJ3402 - ■■■■■ - ■■J1**
104.34	14	290	5820	7.0	0.18	7095/68	✓	✓	✓	✓	✓	✓							**2KJ3402 - ■■■■■ - ■■H1**
96.31	15	290	5820	7.0	0.21	21285/221	✓	✓	✓	✓	✓	✓							**2KJ3402 - ■■■■■ - ■■G1**
84.32	17	290	5820	7.1	0.25	140481/1666	✓	✓	✓	✓	✓	✓							**2KJ3402 - ■■■■■ - ■■F1**
73.93	20	290	5820	7.1	0.24	43989/595	✓	✓	✓	✓	✓	✓							**2KJ3402 - ■■■■■ - ■■E1**
67.07	22	290	5820	7.2	0.34	63855/952	✓	✓	✓	✓	✓	✓							**2KJ3402 - ■■■■■ - ■■D1**
63.13	23	290	5820	7.2	0.40	127710/2023	✓	✓	✓	✓	✓	✓							**2KJ3402 - ■■■■■ - ■■C1**
55.65	26	290	5820	7.2	0.44	946/17	✓	✓	✓	✓	✓	✓							**2KJ3402 - ■■■■■ - ■■B1**
48.29	30	290	5820	7.2	0.59	114939/2380	✓	✓	✓	✓	✓	✓							**2KJ3402 - ■■■■■ - ■■A1**

Article No. supplement		
Shaft design	**1 or 9**	see page 10/49
Motor frame size, motor type, efficiency class		see chapter 9
Frequency and voltage	**2 or 9**	see page 11/2
Gearbox mounting type	**A, F, H or D**	see page 10/42

[1] Only in conjunction with reduced-backlash version

© Innomotics 2023

Transmission ratios and torques

Selection and ordering data

i –	n_2 rpm	T_{2N} Nm	F_{R2} N	φ[1] '	J_G 10^{-4} kgm²	R_{ex} –	Motor frame size 63	71	80	90	100	112	132	160	180	200	225	250	Article No. (Article No. supplement, see below)
FZ.49																			
61.43	24	480	6990	6.0	0.18	1843/30	✓	✓	✓	✓									**2KJ3303 - ■■■■■ - ■■X1**
55.85	26	480	6680	6.0	0.22	1843/33	✓	✓	✓	✓									**2KJ3303 - ■■■■■ - ■■W1**
47.50	31	480	6160	6.0	0.27	95/2	✓	✓	✓	✓									**2KJ3303 - ■■■■■ - ■■V1**
43.18	34	480	5870	6.0	0.33	475/11	✓	✓	✓	✓									**2KJ3303 - ■■■■■ - ■■U1**
38.53	38	480	5530	6.1	0.39	1387/36	✓	✓	✓	✓	✓	✓							**2KJ3303 - ■■■■■ - ■■T1**
34.55	42	480	5220	6.1	0.47	380/11	✓	✓	✓	✓	✓	✓							**2KJ3303 - ■■■■■ - ■■S1**
31.14	47	480	4940	6.2	0.55	1121/36	✓	✓	✓	✓	✓	✓							**2KJ3303 - ■■■■■ - ■■R1**
28.74	50	480	4730	6.1	0.65	1121/39	✓	✓	✓	✓	✓	✓							**2KJ3303 - ■■■■■ - ■■Q1**
26.24	55	480	4490	6.2	0.77	551/21	✓	✓	✓	✓	✓	✓	✓						**2KJ3303 - ■■■■■ - ■■P1**
21.77	67	480	4030	6.3	0.99	1045/48	✓	✓	✓	✓	✓	✓	✓						**2KJ3303 - ■■■■■ - ■■N1**
20.49	71	480	3890	6.3	1.15	1045/51	✓	✓	✓	✓	✓	✓	✓						**2KJ3303 - ■■■■■ - ■■M1**
19.35	75	480	3750	6.3	1.30	1045/54	✓	✓	✓	✓	✓	✓	✓						**2KJ3303 - ■■■■■ - ■■L1**
16.47	88	480	3390	6.4	1.61	247/15	✓	✓	✓	✓	✓	✓	✓						**2KJ3303 - ■■■■■ - ■■K1**
14.11	103	480	3060	6.6	1.99	931/66			✓	✓	✓	✓	✓						**2KJ3303 - ■■■■■ - ■■J1**
12.40	117	480	3010	6.7	2.50	893/72			✓	✓	✓	✓	✓						**2KJ3303 - ■■■■■ - ■■H1**
10.46	139	480	3140	6.8	3.10	722/69			✓	✓	✓	✓	✓						**2KJ3303 - ■■■■■ - ■■G1**
9.12	159	480	3210	7.4	4.20	228/25			✓	✓	✓	✓	✓						**2KJ3303 - ■■■■■ - ■■F1**
8.40	173	450	3010	9.3	2.20	42/5	✓	✓	✓	✓	✓	✓	✓						**2KJ3303 - ■■■■■ - ■■E1**
7.20	201	450	3070	9.6	2.80	1029/143			✓	✓	✓	✓	✓						**2KJ3303 - ■■■■■ - ■■D1**
6.33	229	430	3090	9.9	3.50	329/52			✓	✓	✓	✓	✓						**2KJ3303 - ■■■■■ - ■■C1**
5.34	272	400	3080	10.2	4.60	1596/299			✓	✓	✓	✓	✓						**2KJ3303 - ■■■■■ - ■■B1**
4.65	312	375	3060	11.3	6.10	1512/325			✓	✓	✓	✓	✓						**2KJ3303 - ■■■■■ - ■■A1**
FD.49																			
330.98	4.4	480	7960	6.2	0.06	26809/81	✓	✓											**2KJ3403 - ■■■■■ - ■■S1**
294.29	4.9	480	7960	6.3	0.07	13243/45	✓	✓	✓	✓									**2KJ3403 - ■■■■■ - ■■R1**
258.40	5.6	480	7960	6.3	0.08	1292/5	✓	✓	✓	✓									**2KJ3403 - ■■■■■ - ■■Q1**
234.91	6.2	480	7960	6.3	0.10	2584/11	✓	✓	✓	✓									**2KJ3403 - ■■■■■ - ■■P1**
200.98	7.2	480	7960	6.3	0.12	9044/45	✓	✓	✓	✓									**2KJ3403 - ■■■■■ - ■■N1**
182.71	7.9	480	7960	6.3	0.14	18088/99	✓	✓	✓	✓									**2KJ3403 - ■■■■■ - ■■M1**
161.50	9	480	7960	6.3	0.17	323/2	✓	✓	✓	✓	✓	✓							**2KJ3403 - ■■■■■ - ■■L1**
146.82	9.9	480	7960	6.3	0.22	1615/11	✓	✓	✓	✓	✓	✓							**2KJ3403 - ■■■■■ - ■■K1**
128.60	11	480	7960	6.3	0.26	13889/108	✓	✓	✓	✓	✓	✓							**2KJ3403 - ■■■■■ - ■■J1**
118.71	12	480	7960	6.3	0.31	13889/117	✓	✓	✓	✓	✓	✓							**2KJ3403 - ■■■■■ - ■■H1**
105.10	14	480	7960	6.4	0.37	13243/126	✓	✓	✓	✓	✓	✓	✓						**2KJ3403 - ■■■■■ - ■■G1**
87.48	17	480	7960	6.4	0.50	4199/48	✓	✓	✓	✓	✓	✓	✓						**2KJ3403 - ■■■■■ - ■■F1**
82.33	18	480	7960	6.4	0.59	247/3	✓	✓	✓	✓	✓	✓	✓						**2KJ3403 - ■■■■■ - ■■E1**
73.77	20	480	7630	6.4	0.66	11951/162	✓	✓	✓	✓	✓	✓	✓						**2KJ3403 - ■■■■■ - ■■D1**
62.81	23	480	7070	6.4	0.86	2261/36	✓	✓	✓	✓	✓	✓	✓						**2KJ3403 - ■■■■■ - ■■C1**
53.83	27	480	6560	6.5	1.13	323/6			✓	✓	✓	✓	✓						**2KJ3403 - ■■■■■ - ■■B1**
46.36	31	480	6080	6.5	1.46	10013/216			✓	✓	✓	✓	✓						**2KJ3403 - ■■■■■ - ■■A1**

Article No. supplement		
Shaft design	**1 or 9**	see page 10/49
Motor frame size, motor type, efficiency class		see chapter 9
Frequency and voltage	**2 or 9**	see page 11/2
Gearbox mounting type	**A, F, H or D**	see page 10/42

[1] Only in conjunction with reduced-backlash version

© Innomotics 2023

Selection and ordering data

i –	n_2 rpm	T_{2N} Nm	F_{R2} N	φ[1] ‘	J_G 10^{-4} kgm²	R_{ex} –	Motor frame size 63	71	80	90	100	112	132	160	180	200	225	250	Article No. (Article No. supplement, see below)
FZ.69																			
64.67	22	600	9620	5.7	0.19	194/3	✓	✓	✓	✓									**2KJ3304 - ■■■■■ - ■■X1**
58.79	25	600	9210	5.7	0.23	1940/33	✓	✓	✓	✓									**2KJ3304 - ■■■■■ - ■■W1**
50.00	29	600	8530	5.8	0.29	50/1	✓	✓	✓	✓									**2KJ3304 - ■■■■■ - ■■V1**
45.45	32	600	8140	5.8	0.35	500/11	✓	✓	✓	✓									**2KJ3304 - ■■■■■ - ■■U1**
40.56	36	600	7700	5.8	0.41	365/9	✓	✓	✓	✓	✓	✓							**2KJ3304 - ■■■■■ - ■■T1**
36.36	40	600	7290	5.9	0.49	400/11	✓	✓	✓	✓	✓	✓							**2KJ3304 - ■■■■■ - ■■S1**
32.78	44	600	6920	5.9	0.58	295/9	✓	✓	✓	✓	✓	✓							**2KJ3304 - ■■■■■ - ■■R1**
30.26	48	600	6640	5.9	0.69	1180/39	✓	✓	✓	✓	✓	✓							**2KJ3304 - ■■■■■ - ■■Q1**
27.62	52	600	6330	5.9	0.83	580/21	✓	✓	✓	✓	✓	✓	✓						**2KJ3304 - ■■■■■ - ■■P1**
22.92	63	600	5720	6.0	1.07	275/12	✓	✓	✓	✓	✓	✓	✓						**2KJ3304 - ■■■■■ - ■■N1**
21.57	67	600	5540	6.0	1.23	1100/51	✓	✓	✓	✓	✓	✓	✓						**2KJ3304 - ■■■■■ - ■■M1**
20.37	71	600	5360	6.0	1.39	550/27	✓	✓	✓	✓	✓	✓	✓						**2KJ3304 - ■■■■■ - ■■L1**
17.33	84	600	4890	6.2	1.74	52/3	✓	✓	✓	✓	✓	✓	✓						**2KJ3304 - ■■■■■ - ■■K1**
14.85	98	600	4450	6.2	2.20	490/33			✓	✓	✓	✓	✓						**2KJ3304 - ■■■■■ - ■■J1**
13.06	111	600	4110	6.2	2.70	235/18			✓	✓	✓	✓	✓						**2KJ3304 - ■■■■■ - ■■H1**
11.01	132	600	4040	6.2	3.50	760/69			✓	✓	✓	✓	✓						**2KJ3304 - ■■■■■ - ■■G1**
9.60	151	600	4140	6.2	4.60	48/5			✓	✓	✓	✓	✓						**2KJ3304 - ■■■■■ - ■■F1**
8.90	163	475	4040	8.9	2.40	89/10	✓	✓	✓	✓	✓	✓	✓						**2KJ3304 - ■■■■■ - ■■E1**
7.62	190	465	4100	8.9	3.10	4361/572			✓	✓	✓	✓	✓						**2KJ3304 - ■■■■■ - ■■D1**
6.70	216	440	4120	8.9	3.90	4183/624			✓	✓	✓	✓	✓						**2KJ3304 - ■■■■■ - ■■C1**
5.66	256	410	4110	8.9	5.10	1691/299			✓	✓	✓	✓	✓						**2KJ3304 - ■■■■■ - ■■B1**
4.93	294	385	4070	8.9	6.80	1602/325			✓	✓	✓	✓	✓						**2KJ3304 - ■■■■■ - ■■A1**
FD.69																			
348.40	4.2	600	10800	6.0	0.06	28220/81	✓	✓											**2KJ3404 - ■■■■■ - ■■S1**
309.78	4.7	600	10800	6.0	0.07	2788/9	✓	✓	✓	✓									**2KJ3404 - ■■■■■ - ■■R1**
272.00	5.3	600	10800	6.0	0.08	272/1	✓	✓	✓	✓									**2KJ3404 - ■■■■■ - ■■Q1**
247.27	5.9	600	10800	6.0	0.10	2720/11	✓	✓	✓	✓									**2KJ3404 - ■■■■■ - ■■P1**
211.56	6.9	600	10800	6.0	0.12	1904/9	✓	✓	✓	✓									**2KJ3404 - ■■■■■ - ■■N1**
192.32	7.5	600	10800	6.0	0.14	19040/99	✓	✓	✓	✓									**2KJ3404 - ■■■■■ - ■■M1**
170.00	8.5	600	10800	6.1	0.17	170/1	✓	✓	✓	✓	✓	✓							**2KJ3404 - ■■■■■ - ■■L1**
154.55	9.4	600	10800	6.1	0.22	1700/11	✓	✓	✓	✓	✓	✓							**2KJ3404 - ■■■■■ - ■■K1**
135.37	11	600	10800	6.1	0.26	3655/27	✓	✓	✓	✓	✓	✓							**2KJ3404 - ■■■■■ - ■■J1**
124.96	12	600	10800	6.1	0.31	14620/117	✓	✓	✓	✓	✓	✓							**2KJ3404 - ■■■■■ - ■■H1**
110.63	13	600	10800	6.1	0.38	6970/63	✓	✓	✓	✓	✓	✓	✓						**2KJ3404 - ■■■■■ - ■■G1**
92.08	16	600	10800	6.1	0.51	1105/12	✓	✓	✓	✓	✓	✓	✓						**2KJ3404 - ■■■■■ - ■■F1**
86.67	17	600	10800	6.1	0.60	260/3	✓	✓	✓	✓	✓	✓	✓						**2KJ3404 - ■■■■■ - ■■E1**
77.65	19	600	10400	6.2	0.66	6290/81	✓	✓	✓	✓	✓	✓	✓						**2KJ3404 - ■■■■■ - ■■D1**
66.11	22	600	9720	6.2	0.87	595/9	✓	✓	✓	✓	✓	✓	✓						**2KJ3404 - ■■■■■ - ■■C1**
56.67	26	600	9050	6.2	1.15	170/3			✓	✓	✓	✓	✓						**2KJ3404 - ■■■■■ - ■■B1**
48.80	30	600	8430	6.2	1.47	2635/54			✓	✓	✓	✓	✓						**2KJ3404 - ■■■■■ - ■■A1**

Article No. supplement		
Shaft design	**1 or 9**	see page 10/49
Motor frame size, motor type, efficiency class		see chapter 9
Frequency and voltage	**2 or 9**	see page 11/2
Gearbox mounting type	**A, F, H or D**	see page 10/42

[1] Only in conjunction with reduced-backlash version

© Innomotics 2023

Transmission ratios and torques

Selection and ordering data

i –	n_2 rpm	T_{2N} Nm	F_{R2} N	φ[1] ‘	J_G 10^{-4} kgm²	R_{ex} –	Motor frame size 63	71	80	90	100	112	132	160	180	200	225	250	Article No. (Article No. supplement, see below)
FZ.79																			
53.55	27	1000	13600	5.6	0.56	589/11		✓	✓	✓									**2KJ3305 - ■■■■■ - ■■X1**
48.03	30	1000	13600	5.6	0.77	1729/36		✓	✓	✓	✓	✓							**2KJ3305 - ■■■■■ - ■■W1**
43.18	34	1000	13600	5.7	0.87	475/11		✓	✓	✓	✓	✓							**2KJ3305 - ■■■■■ - ■■V1**
39.06	37	1000	13600	5.7	0.97	703/18		✓	✓	✓	✓	✓							**2KJ3305 - ■■■■■ - ■■U1**
36.05	40	1000	13600	5.7	1.15	1406/39		✓	✓	✓	✓	✓							**2KJ3305 - ■■■■■ - ■■T1**
33.02	44	1000	13600	5.7	1.49	1387/42		✓	✓	✓	✓	✓	✓	✓					**2KJ3305 - ■■■■■ - ■■S1**
27.71	52	1000	13600	5.7	1.62	665/24		✓	✓	✓	✓	✓	✓	✓					**2KJ3305 - ■■■■■ - ■■R1**
26.08	56	1000	13600	5.7	1.85	1330/51		✓	✓	✓	✓	✓	✓	✓					**2KJ3305 - ■■■■■ - ■■Q1**
23.93	61	1000	13600	5.7	2.0	646/27		✓	✓	✓	✓	✓	✓	✓					**2KJ3305 - ■■■■■ - ■■P1**
20.90	69	1000	13600	5.7	2.9	209/10		✓	✓	✓	✓	✓	✓	✓					**2KJ3305 - ■■■■■ - ■■N1**
18.71	77	1000	12900	5.7	3.6	1235/66			✓	✓	✓	✓	✓	✓					**2KJ3305 - ■■■■■ - ■■M1**
16.36	89	1000	12200	5.7	4.2	589/36			✓	✓	✓	✓	✓	✓					**2KJ3305 - ■■■■■ - ■■L1**
14.04	103	1000	11400	5.8	4.7	323/23			✓	✓	✓	✓	✓	✓					**2KJ3305 - ■■■■■ - ■■K1**
12.41	117	1000	10800	6.2	6.0	931/75			✓	✓	✓	✓	✓	✓					**2KJ3305 - ■■■■■ - ■■J1**
10.56	137	1000	10100	6.3	7.8	95/9					✓	✓	✓	✓					**2KJ3305 - ■■■■■ - ■■H1**
9.05	160	1000	9980	6.5	10	190/21					✓	✓	✓	✓					**2KJ3305 - ■■■■■ - ■■G1**
8.51	170	720	10300	8.9	4.6	468/55			✓	✓	✓	✓	✓	✓					**2KJ3305 - ■■■■■ - ■■F1**
7.44	195	725	9770	9.2	5.5	186/25			✓	✓	✓	✓	✓	✓					**2KJ3305 - ■■■■■ - ■■E1**
6.39	227	720	9690	9.3	6.5	3672/575			✓	✓	✓	✓	✓	✓					**2KJ3305 - ■■■■■ - ■■D1**
5.64	257	700	9620	10.2	8.3	3528/625			✓	✓	✓	✓	✓	✓					**2KJ3305 - ■■■■■ - ■■C1**
4.80	302	650	9480	10.6	11	24/5					✓	✓	✓	✓					**2KJ3305 - ■■■■■ - ■■B1**
4.11	353	605	9310	11.0	15	144/35					✓	✓	✓	✓					**2KJ3305 - ■■■■■ - ■■A1**
FD.79																			
357.00	4.1	1000	13600	5.6	0.17	57133/160		✓	✓	✓									**2KJ3405 - ■■■■■ - ■■S1**
324.62	4.5	1000	13600	5.6	0.20	57133/176		✓	✓	✓									**2KJ3405 - ■■■■■ - ■■R1**
276.09	5.3	1000	13600	5.6	0.25	8835/32		✓	✓	✓									**2KJ3405 - ■■■■■ - ■■Q1**
250.99	5.8	1000	13600	5.6	0.30	44175/176		✓	✓	✓									**2KJ3405 - ■■■■■ - ■■P1**
223.94	6.5	1000	13600	5.6	0.35	42997/192		✓	✓	✓	✓	✓							**2KJ3405 - ■■■■■ - ■■N1**
200.80	7.2	1000	13600	5.6	0.42	8835/44		✓	✓	✓	✓	✓							**2KJ3405 - ■■■■■ - ■■M1**
180.99	8	1000	13600	5.6	0.49	34751/192		✓	✓	✓	✓	✓							**2KJ3405 - ■■■■■ - ■■L1**
167.07	8.7	1000	13600	5.6	0.58	34751/208		✓	✓	✓	✓	✓							**2KJ3405 - ■■■■■ - ■■K1**
152.51	9.5	1000	13600	5.6	0.69	17081/112		✓	✓	✓	✓	✓	✓	✓					**2KJ3405 - ■■■■■ - ■■J1**
126.54	11	1000	13600	5.7	0.87	32395/256		✓	✓	✓	✓	✓	✓	✓					**2KJ3405 - ■■■■■ - ■■H1**
119.10	12	1000	13600	5.7	1.01	32395/272		✓	✓	✓	✓	✓	✓	✓					**2KJ3405 - ■■■■■ - ■■G1**
112.48	13	1000	13600	5.7	1.15	32395/288		✓	✓	✓	✓	✓	✓	✓					**2KJ3405 - ■■■■■ - ■■F1**
95.71	15	1000	13600	5.7	1.39	7657/80		✓	✓	✓	✓	✓	✓	✓					**2KJ3405 - ■■■■■ - ■■E1**
81.99	18	1000	13600	5.7	1.70	28861/352			✓	✓	✓	✓	✓	✓					**2KJ3405 - ■■■■■ - ■■D1**
72.09	20	1000	13600	5.7	2.10	27683/384			✓	✓	✓	✓	✓	✓					**2KJ3405 - ■■■■■ - ■■C1**
60.82	24	1000	13600	5.7	2.60	11191/184			✓	✓	✓	✓	✓	✓					**2KJ3405 - ■■■■■ - ■■B1**
53.01	27	1000	13600	5.8	3.50	5301/100			✓	✓	✓	✓	✓	✓					**2KJ3405 - ■■■■■ - ■■A1**

Article No. supplement		
Shaft design	**1 or 9**	see page 10/49
Motor frame size, motor type, efficiency class		see chapter 9
Frequency and voltage	**2 or 9**	see page 11/2
Gearbox mounting type	**A, F, H or D**	see page 10/42

[1] Only in conjunction with reduced-backlash version

© Innomotics 2023

Selection and ordering data

i –	n_2 rpm	T_{2N} Nm	F_{R2} N	φ[1] ‘	J_G 10^{-4} kgm²	R_{ex} –	Motor frame size 63	71	80	90	100	112	132	160	180	200	225	250	Article No. (Article No. supplement, see below)
FZ.89																			
61.72	23	1850	17400	4.8	1.38	2407/39			✓	✓	✓	✓							**2KJ3306 - ■■■■■ - ■■B2**
55.72	26	1850	17400	4.8	1.51	7968/143			✓	✓	✓	✓							**2KJ3306 - ■■■■■ - ■■A2**
50.54	29	1850	17400	4.8	1.77	7885/156			✓	✓	✓	✓							**2KJ3306 - ■■■■■ - ■■X1**
46.66	31	1850	17400	4.8	2.1	7885/169			✓	✓	✓	✓							**2KJ3306 - ■■■■■ - ■■W1**
42.41	34	1850	17400	4.9	2.4	7719/182			✓	✓	✓	✓	✓	✓					**2KJ3306 - ■■■■■ - ■■V1**
35.91	40	1850	17400	4.9	2.9	3735/104			✓	✓	✓	✓	✓	✓					**2KJ3306 - ■■■■■ - ■■U1**
33.80	43	1850	17400	4.9	3.0	7470/221			✓	✓	✓	✓	✓	✓					**2KJ3306 - ■■■■■ - ■■T1**
31.21	46	1850	17400	5.0	4.5	3652/117			✓	✓	✓	✓	✓	✓					**2KJ3306 - ■■■■■ - ■■S1**
27.77	52	1850	17400	5.0	5.5	7221/260			✓	✓	✓	✓	✓	✓					**2KJ3306 - ■■■■■ - ■■R1**
24.67	59	1850	17400	5.0	6.7	7055/286			✓	✓	✓	✓	✓	✓					**2KJ3306 - ■■■■■ - ■■Q1**
22.08	66	1850	17400	5.1	6.7	6889/312			✓	✓	✓	✓	✓	✓					**2KJ3306 - ■■■■■ - ■■P1**
18.88	77	1850	17200	5.1	7.9	5644/299			✓	✓	✓	✓	✓	✓					**2KJ3306 - ■■■■■ - ■■N1**
16.86	86	1850	16400	5.4	10	5478/325			✓	✓	✓	✓	✓	✓	✓				**2KJ3306 - ■■■■■ - ■■M1**
14.90	97	1850	15500	5.5	12	581/39					✓	✓	✓	✓	✓				**2KJ3306 - ■■■■■ - ■■L1**
13.07	111	1850	14600	5.3	16	3569/273					✓	✓	✓	✓	✓				**2KJ3306 - ■■■■■ - ■■K1**
11.38	127	1850	14600	5.3	20	3403/299					✓	✓	✓	✓	✓				**2KJ3306 - ■■■■■ - ■■J1**
9.73	149	1850	14600	5.5	26	2656/273					✓	✓	✓	✓	✓				**2KJ3306 - ■■■■■ - ■■H1**
8.33	174	1740	14500	5.6	33	2490/299					✓	✓	✓	✓	✓				**2KJ3306 - ■■■■■ - ■■G1**
7.60	191	1100	14100	9.0	14	4752/625			✓	✓	✓	✓	✓	✓	✓				**2KJ3306 - ■■■■■ - ■■F1**
6.72	216	1110	14000	9.2	17	168/25					✓	✓	✓	✓	✓				**2KJ3306 - ■■■■■ - ■■E1**
5.90	246	1110	13800	9.2	23	1032/175					✓	✓	✓	✓	✓				**2KJ3306 - ■■■■■ - ■■D1**
5.13	283	1110	13600	9.2	28	2952/575					✓	✓	✓	✓	✓				**2KJ3306 - ■■■■■ - ■■C1**
4.39	330	1060	13300	9.2	39	768/175					✓	✓	✓	✓	✓				**2KJ3306 - ■■■■■ - ■■B1**
3.76	386	985	12900	9.5	50	432/115					✓	✓	✓	✓	✓				**2KJ3306 - ■■■■■ - ■■A1**
FD.89																			
335.30	4.3	1850	17400	5.1	0.42	370512/1105			✓	✓									**2KJ3406 - ■■■■■ - ■■S1**
304.82	4.8	1850	17400	5.1	0.51	741024/2431			✓	✓									**2KJ3406 - ■■■■■ - ■■R1**
273.41	5.3	1850	17400	5.1	0.71	4648/17			✓	✓	✓	✓							**2KJ3406 - ■■■■■ - ■■Q1**
245.82	5.9	1850	17400	5.1	0.79	597600/2431			✓	✓	✓	✓							**2KJ3406 - ■■■■■ - ■■P1**
222.33	6.5	1850	17400	5.1	0.88	49136/221			✓	✓	✓	✓							**2KJ3406 - ■■■■■ - ■■N1**
205.23	7.1	1850	17400	5.1	1.03	589632/2873			✓	✓	✓	✓							**2KJ3406 - ■■■■■ - ■■M1**
188.00	7.7	1850	17400	5.1	1.35	290832/1547			✓	✓	✓	✓	✓	✓					**2KJ3406 - ■■■■■ - ■■L1**
157.74	9.2	1850	17400	5.1	1.43	34860/221			✓	✓	✓	✓	✓	✓					**2KJ3406 - ■■■■■ - ■■K1**
148.46	9.8	1850	17400	5.1	1.64	557760/3757			✓	✓	✓	✓	✓	✓					**2KJ3406 - ■■■■■ - ■■J1**
136.21	11	1850	17400	5.1	1.79	5312/39			✓	✓	✓	✓	✓	✓					**2KJ3406 - ■■■■■ - ■■H1**
118.98	12	1850	17400	5.1	2.6	131472/1105			✓	✓	✓	✓	✓	✓					**2KJ3406 - ■■■■■ - ■■G1**
106.52	14	1850	17400	5.1	3.1	19920/187			✓	✓	✓	✓	✓	✓					**2KJ3406 - ■■■■■ - ■■F1**
93.14	16	1850	17400	5.1	3.7	20584/221			✓	✓	✓	✓	✓	✓					**2KJ3406 - ■■■■■ - ■■E1**
79.95	18	1850	17400	5.2	4.0	23904/299			✓	✓	✓	✓	✓	✓					**2KJ3406 - ■■■■■ - ■■D1**
70.67	21	1850	17400	5.2	5.1	390432/5525			✓	✓	✓	✓	✓	✓					**2KJ3406 - ■■■■■ - ■■C1**
60.09	24	1850	17400	5.3	6.5	13280/221					✓	✓	✓	✓					**2KJ3406 - ■■■■■ - ■■B1**
51.51	28	1850	17400	5.3	8.5	79680/1547					✓	✓	✓	✓					**2KJ3406 - ■■■■■ - ■■A1**

Article No. supplement		
Shaft design	**1 or 9**	see page 10/49
Motor frame size, motor type, efficiency class		see chapter 9
Frequency and voltage	**2 or 9**	see page 11/2
Gearbox mounting type	**A, F, H or D**	see page 10/42

[1] Only in conjunction with reduced-backlash version

© Innomotics 2023

Transmission ratios and torques

Selection and ordering data

i –	n_2 rpm	T_{2N} Nm	F_{R2} N	φ[1)] ‘	J_G 10^{-4} kgm²	R_{ex} –	Motor frame size 63	71	80	90	100	112	132	160	180	200	225	250	Article No. (Article No. supplement, see below)
FZ.109																			
70.74	20	3100	25000	4.6	3.6	12733/180				✓	✓	✓							**2KJ3307 - ■■■■■ - ■■B2**
65.30	22	3100	25000	4.6	4.3	12733/195				✓	✓	✓							**2KJ3307 - ■■■■■ - ■■A2**
60.12	24	3100	25000	4.6	4.9	6313/105				✓	✓	✓	✓	✓					**2KJ3307 - ■■■■■ - ■■X1**
51.27	28	3100	25000	4.6	6.3	2461/48				✓	✓	✓	✓	✓					**2KJ3307 - ■■■■■ - ■■W1**
48.25	30	3100	25000	4.6	7.1	2461/51				✓	✓	✓	✓	✓					**2KJ3307 - ■■■■■ - ■■V1**
44.78	32	3100	25000	4.6	7.8	12091/270				✓	✓	✓	✓	✓					**2KJ3307 - ■■■■■ - ■■U1**
39.59	37	3100	25000	4.6	9.5	3959/100				✓	✓	✓	✓	✓					**2KJ3307 - ■■■■■ - ■■T1**
35.34	41	3100	24700	4.7	11	11663/330				✓	✓	✓	✓	✓					**2KJ3307 - ■■■■■ - ■■S1**
31.80	46	3100	23600	4.7	13	11449/360				✓	✓	✓	✓	✓					**2KJ3307 - ■■■■■ - ■■R1**
27.60	53	3100	22200	4.7	16	9523/345				✓	✓	✓	✓	✓					**2KJ3307 - ■■■■■ - ■■Q1**
24.82	58	3100	21200	4.9	19	3103/125				✓	✓	✓	✓	✓	✓				**2KJ3307 - ■■■■■ - ■■P1**
21.70	67	3100	19900	5.0	23	7811/360					✓	✓	✓	✓	✓	✓			**2KJ3307 - ■■■■■ - ■■N1**
19.36	75	3100	18900	5.0	27	2033/105					✓	✓	✓	✓	✓	✓	✓		**2KJ3307 - ■■■■■ - ■■M1**
17.06	85	3100	17800	5.0	33	1177/69					✓	✓	✓	✓	✓	✓	✓		**2KJ3307 - ■■■■■ - ■■L1**
14.95	97	3100	16700	5.1	40	4708/315					✓	✓	✓	✓	✓	✓	✓		**2KJ3307 - ■■■■■ - ■■K1**
13.03	111	3100	15600	5.2	48	1498/115					✓	✓	✓	✓	✓	✓	✓		**2KJ3307 - ■■■■■ - ■■J1**
11.89	122	3060	15600	5.2	56	107/9					✓	✓	✓	✓	✓	✓	✓		**2KJ3307 - ■■■■■ - ■■H1**
10.23	142	2880	15900	5.3	70	1177/115							✓	✓	✓	✓	✓		**2KJ3307 - ■■■■■ - ■■G1**
9.02	161	2090	16100	7.6	36	1767/196					✓	✓	✓	✓	✓	✓	✓		**2KJ3307 - ■■■■■ - ■■F1**
7.94	183	2000	15800	7.8	44	5115/644					✓	✓	✓	✓	✓	✓	✓		**2KJ3307 - ■■■■■ - ■■E1**
6.96	208	1900	15700	7.9	54	341/49					✓	✓	✓	✓	✓	✓	✓		**2KJ3307 - ■■■■■ - ■■D1**
6.07	239	1800	15600	8.1	68	279/46					✓	✓	✓	✓	✓	✓	✓		**2KJ3307 - ■■■■■ - ■■C1**
5.54	262	1730	15400	8.2	79	155/28					✓	✓	✓	✓	✓	✓	✓		**2KJ3307 - ■■■■■ - ■■B1**
4.77	304	1620	15200	8.4	102	3069/644							✓	✓	✓	✓	✓		**2KJ3307 - ■■■■■ - ■■A1**
FD.109																			
410.00	3.5	3100	25000	6.5	1.27	332021/810				✓	✓	✓							**2KJ3407 - ■■■■■ - ■■T1**
370.00	3.9	3100	25000	6.5	1.37	183184/495				✓	✓	✓							**2KJ3407 - ■■■■■ - ■■S1**
335.70	4.3	3100	25000	6.5	1.61	217531/648				✓	✓	✓							**2KJ3407 - ■■■■■ - ■■R1**
309.87	4.7	3100	25000	6.5	1.89	217531/702				✓	✓	✓							**2KJ3407 - ■■■■■ - ■■Q1**
281.68	5.1	3100	25000	6.5	2.2	354919/1260				✓	✓	✓	✓	✓					**2KJ3407 - ■■■■■ - ■■P1**
238.52	6.1	3100	25000	6.5	2.6	11449/48				✓	✓	✓	✓	✓					**2KJ3407 - ■■■■■ - ■■N1**
224.49	6.5	3100	25000	6.5	2.6	11449/51				✓	✓	✓	✓	✓					**2KJ3407 - ■■■■■ - ■■M1**
207.31	7	3100	25000	6.5	4.0	251878/1215				✓	✓	✓	✓	✓					**2KJ3407 - ■■■■■ - ■■L1**
184.46	7.9	3100	25000	6.5	5.0	332021/1800				✓	✓	✓	✓	✓					**2KJ3407 - ■■■■■ - ■■K1**
163.83	8.9	3100	25000	6.5	5.9	194633/1188				✓	✓	✓	✓	✓					**2KJ3407 - ■■■■■ - ■■J1**
146.65	9.9	3100	25000	6.5	5.9	950267/6480				✓	✓	✓	✓	✓					**2KJ3407 - ■■■■■ - ■■H1**
125.37	12	3100	25000	6.5	6.7	389266/3105				✓	✓	✓	✓	✓					**2KJ3407 - ■■■■■ - ■■G1**
111.95	13	3100	25000	6.5	8.6	125939/1125				✓	✓	✓	✓	✓					**2KJ3407 - ■■■■■ - ■■F1**
98.94	15	3100	25000	6.5	9.6	80143/810					✓	✓	✓	✓					**2KJ3407 - ■■■■■ - ■■E1**
86.83	17	3100	25000	6.5	14	492307/5670					✓	✓	✓	✓					**2KJ3407 - ■■■■■ - ■■D1**
75.59	19	3100	25000	6.5	16	469409/6210					✓	✓	✓	✓					**2KJ3407 - ■■■■■ - ■■C1**
64.62	22	3100	25000	6.5	21	183184/2835					✓	✓	✓	✓					**2KJ3407 - ■■■■■ - ■■B1**
55.31	26	3100	25000	6.5	25	11449/207					✓	✓	✓	✓					**2KJ3407 - ■■■■■ - ■■A1**

Article No. supplement		
Shaft design	**1 or 9**	see page 10/49
Motor frame size, motor type, efficiency class		see chapter 9
Frequency and voltage	**2 or 9**	see page 11/2
Gearbox mounting type	**A, F, H or D**	see page 10/42

1) Only in conjunction with reduced-backlash version

© Innomotics 2023

Selection and ordering data

i –	n_2 rpm	T_{2N} Nm	F_{R2} N	φ[1] ‘	J_G 10^{-4} kgm²	R_{ex} –	Motor frame size 63	71	80	90	100	112	132	160	180	200	225	250	Article No. (Article No. supplement, see below)
FZ.129																			
69.20	21	4850	37200	5.1	7.7	13563/196				✓	✓	✓	✓	✓					**2KJ3308 - ■■■■■ - ■■A2**
59.22	24	4850	37200	5.1	9.7	6633/112				✓	✓	✓	✓	✓					**2KJ3308 - ■■■■■ - ■■X1**
55.74	26	4850	37200	5.1	11	6633/119				✓	✓	✓	✓	✓					**2KJ3308 - ■■■■■ - ■■W1**
52.25	28	4850	36600	5.1	12	209/4				✓	✓	✓	✓	✓					**2KJ3308 - ■■■■■ - ■■V1**
46.32	31	4850	34800	5.1	15	12969/280				✓	✓	✓	✓	✓					**2KJ3308 - ■■■■■ - ■■U1**
41.14	35	4850	33100	5.1	18	288/7				✓	✓	✓	✓	✓					**2KJ3308 - ■■■■■ - ■■T1**
37.12	39	4850	31700	5.1	21	297/8				✓	✓	✓	✓	✓					**2KJ3308 - ■■■■■ - ■■S1**
32.90	44	4850	30100	5.2	26	10593/322				✓	✓	✓	✓	✓					**2KJ3308 - ■■■■■ - ■■R1**
29.13	50	4850	28500	5.3	29	10197/350				✓	✓	✓	✓	✓	✓				**2KJ3308 - ■■■■■ - ■■Q1**
25.93	56	4850	27100	5.3	35	363/14					✓	✓	✓	✓	✓	✓			**2KJ3308 - ■■■■■ - ■■P1**
23.23	62	4850	25800	5.3	41	2277/98					✓	✓	✓	✓	✓	✓	✓		**2KJ3308 - ■■■■■ - ■■N1**
20.60	70	4850	24400	5.3	49	6633/322					✓	✓	✓	✓	✓	✓	✓		**2KJ3308 - ■■■■■ - ■■M1**
18.18	80	4850	23000	5.4	60	891/49					✓	✓	✓	✓	✓	✓	✓	✓	**2KJ3308 - ■■■■■ - ■■L1**
15.99	91	4800	21700	5.4	73	2574/161					✓	✓	✓	✓	✓	✓	✓	✓	**2KJ3308 - ■■■■■ - ■■K1**
14.48	100	4690	21000	5.5	83	1419/98					✓	✓	✓	✓	✓	✓	✓	✓	**2KJ3308 - ■■■■■ - ■■J1**
12.61	115	4530	20100	5.5	101	4059/322							✓	✓	✓	✓	✓	✓	**2KJ3308 - ■■■■■ - ■■H1**
10.34	140	4320	20400	5.5	135	1881/182							✓	✓	✓	✓	✓	✓	**2KJ3308 - ■■■■■ - ■■G1**
9.80	148	3630	19600	8.1	64	2479/253					✓	✓	✓	✓	✓	✓	✓		**2KJ3308 - ■■■■■ - ■■F1**
8.65	168	3640	19700	8.1	79	666/77					✓	✓	✓	✓	✓	✓	✓	✓	**2KJ3308 - ■■■■■ - ■■E1**
7.60	191	3620	19800	8.1	97	1924/253					✓	✓	✓	✓	✓	✓	✓	✓	**2KJ3308 - ■■■■■ - ■■D1**
6.89	210	3630	19700	8.2	112	1591/231					✓	✓	✓	✓	✓	✓	✓	✓	**2KJ3308 - ■■■■■ - ■■C1**
6.00	242	3640	19600	8.3	140	1517/253							✓	✓	✓	✓	✓	✓	**2KJ3308 - ■■■■■ - ■■B1**
4.92	295	3030	19300	8.5	192	703/143							✓	✓	✓	✓	✓	✓	**2KJ3308 - ■■■■■ - ■■A1**
FD.129																			
413.00	3.5	4850	37200	5.5	3.3	9911/24				✓	✓	✓							**2KJ3408 - ■■■■■ - ■■T1**
381.00	3.8	4850	37200	5.5	3.9	9911/26				✓	✓	✓							**2KJ3408 - ■■■■■ - ■■S1**
351.00	4.1	4850	37200	5.5	4.5	34397/98				✓	✓	✓	✓	✓					**2KJ3408 - ■■■■■ - ■■R1**
299.31	4.8	4850	37200	5.5	5.6	67045/224				✓	✓	✓	✓	✓					**2KJ3408 - ■■■■■ - ■■Q1**
281.70	5.1	4850	37200	5.5	6.4	67045/238				✓	✓	✓	✓	✓					**2KJ3408 - ■■■■■ - ■■P1**
261.42	5.5	4850	37200	5.5	6.9	65879/252				✓	✓	✓	✓	✓					**2KJ3408 - ■■■■■ - ■■N1**
231.12	6.3	4850	37200	5.5	8.4	64713/280				✓	✓	✓	✓	✓					**2KJ3408 - ■■■■■ - ■■M1**
206.32	7	4850	37200	5.5	10	5777/28				✓	✓	✓	✓	✓					**2KJ3408 - ■■■■■ - ■■L1**
185.66	7.8	4850	37200	5.5	12	62381/336				✓	✓	✓	✓	✓					**2KJ3408 - ■■■■■ - ■■K1**
161.14	9	4850	37200	5.5	14	51887/322				✓	✓	✓	✓	✓					**2KJ3408 - ■■■■■ - ■■J1**
144.92	10	4850	37200	5.5	16	50721/350				✓	✓	✓	✓	✓					**2KJ3408 - ■■■■■ - ■■H1**
126.66	11	4850	37200	5.5	19	42559/336					✓	✓	✓	✓					**2KJ3408 - ■■■■■ - ■■G1**
113.03	13	4850	37200	5.5	23	11077/98					✓	✓	✓	✓					**2KJ3408 - ■■■■■ - ■■F1**
99.58	15	4850	37200	5.5	27	32065/322					✓	✓	✓	✓					**2KJ3408 - ■■■■■ - ■■E1**
87.25	17	4850	37200	5.5	32	12826/147					✓	✓	✓	✓					**2KJ3408 - ■■■■■ - ■■D1**
76.04	19	4850	37200	5.5	37	1749/23					✓	✓	✓	✓					**2KJ3408 - ■■■■■ - ■■C1**
69.40	21	4850	37200	5.5	44	2915/42					✓	✓	✓	✓					**2KJ3408 - ■■■■■ - ■■B1**
59.75	24	4850	37200	5.5	53	19239/322							✓	✓					**2KJ3408 - ■■■■■ - ■■A1**

Article No. supplement		
Shaft design	**1 or 9**	see page 10/49
Motor frame size, motor type, efficiency class		see chapter 9
Frequency and voltage	**2 or 9**	see page 11/2
Gearbox mounting type	**A, F, H or D**	see page 10/42

[1] Only in conjunction with reduced-backlash version

© Innomotics 2023

Transmission ratios and torques

Selection and ordering data

i –	n_2 rpm	T_{2N} Nm	F_{R2} N	φ[1] ‘	J_G 10^{-4} kgm²	R_{ex} –	Motor frame size 63	71	80	90	100	112	132	160	180	200	225	250	Article No. (Article No. supplement, see below)
FZ.149																			
48.48	30	8000	42700	4.6	31	1600/33					✓	✓	✓	✓					**2KJ3310 - ■■■■■ - ■■T1**
43.89	33	8000	40800	4.6	36	395/9					✓	✓	✓	✓					**2KJ3310 - ■■■■■ - ■■S1**
38.55	38	8000	38500	4.6	44	2660/69					✓	✓	✓	✓					**2KJ3310 - ■■■■■ - ■■R1**
34.93	42	8000	36800	4.6	51	524/15					✓	✓	✓	✓	✓				**2KJ3310 - ■■■■■ - ■■Q1**
31.11	47	8000	34900	4.7	60	280/9					✓	✓	✓	✓	✓	✓			**2KJ3310 - ■■■■■ - ■■P1**
27.94	52	8000	33100	4.7	72	1760/63					✓	✓	✓	✓	✓	✓	✓		**2KJ3310 - ■■■■■ - ■■N1**
24.93	58	8000	31300	4.7	84	1720/69					✓	✓	✓	✓	✓	✓	✓		**2KJ3310 - ■■■■■ - ■■M1**
22.22	65	8000	29600	4.7	98	200/9					✓	✓	✓	✓	✓	✓	✓	✓	**2KJ3310 - ■■■■■ - ■■L1**
19.71	74	8000	27800	4.7	117	1360/69					✓	✓	✓	✓	✓	✓	✓	✓	**2KJ3310 - ■■■■■ - ■■K1**
18.10	80	8000	26600	4.8	132	380/21					✓	✓	✓	✓	✓	✓	✓	✓	**2KJ3310 - ■■■■■ - ■■J1**
15.94	91	8000	24900	4.8	156	1100/69							✓	✓	✓	✓	✓	✓	**2KJ3310 - ■■■■■ - ■■H1**
13.08	111	7620	23200	4.9	212	170/13							✓	✓	✓	✓	✓	✓	**2KJ3310 - ■■■■■ - ■■G1**
11.47	126	7320	23700	4.9	241	172/15							✓	✓	✓	✓	✓	✓	**2KJ3310 - ■■■■■ - ■■F1**
8.97	162	6770	24500	6.2	379	260/29							✓	✓	✓	✓	✓	✓	**2KJ3310 - ■■■■■ - ■■E1**
8.09	179	5690	23900	6.2	200	2420/299							✓	✓	✓	✓	✓	✓	**2KJ3310 - ■■■■■ - ■■D1**
6.64	218	5690	24000	6.3	277	1122/169							✓	✓	✓	✓	✓	✓	**2KJ3310 - ■■■■■ - ■■C1**
5.82	249	5680	24000	6.6	325	1892/325							✓	✓	✓	✓	✓	✓	**2KJ3310 - ■■■■■ - ■■B1**
4.55	319	5650	23600	7.3	517	132/29							✓	✓	✓	✓	✓	✓	**2KJ3310 - ■■■■■ - ■■A1**
FD.149																			
377.00	3.8	8000	65000	4.8	7.1	18495/49					✓	✓	✓	✓					**2KJ3410 - ■■■■■ - ■■W1**
323.04	4.5	8000	65000	4.8	9	9045/28					✓	✓	✓	✓					**2KJ3410 - ■■■■■ - ■■V1**
304.03	4.8	8000	65000	4.8	10	36180/119					✓	✓	✓	✓					**2KJ3410 - ■■■■■ - ■■U1**
285.00	5.1	8000	65000	4.8	11	285/1					✓	✓	✓	✓					**2KJ3410 - ■■■■■ - ■■T1**
252.64	5.7	8000	65000	4.8	14	3537/14					✓	✓	✓	✓					**2KJ3410 - ■■■■■ - ■■S1**
224.42	6.5	8000	65000	4.8	16	17280/77					✓	✓	✓	✓					**2KJ3410 - ■■■■■ - ■■R1**
202.50	7.2	8000	65000	4.8	19	405/2					✓	✓	✓	✓					**2KJ3410 - ■■■■■ - ■■Q1**
179.44	8.1	8000	65000	4.8	23	28890/161					✓	✓	✓	✓					**2KJ3410 - ■■■■■ - ■■P1**
158.91	9.1	8000	65000	4.8	26	5562/35					✓	✓	✓	✓	✓				**2KJ3410 - ■■■■■ - ■■N1**
141.43	10	8000	65000	4.8	31	990/7					✓	✓	✓	✓	✓	✓			**2KJ3410 - ■■■■■ - ■■M1**
126.73	11	8000	65000	4.8	37	6210/49					✓	✓	✓	✓	✓	✓	✓		**2KJ3410 - ■■■■■ - ■■L1**
112.36	13	8000	63600	4.8	43	18090/161					✓	✓	✓	✓	✓	✓	✓		**2KJ3410 - ■■■■■ - ■■K1**
99.18	15	8000	60700	4.8	53	4860/49					✓	✓	✓	✓	✓	✓	✓	✓	**2KJ3410 - ■■■■■ - ■■J1**
87.20	17	8000	57700	4.8	63	14040/161					✓	✓	✓	✓	✓	✓	✓	✓	**2KJ3410 - ■■■■■ - ■■H1**
78.98	18	8000	54800	4.8	71	3870/49					✓	✓	✓	✓	✓	✓	✓	✓	**2KJ3410 - ■■■■■ - ■■G1**
68.76	21	8000	52600	4.9	85	11070/161							✓	✓	✓	✓	✓	✓	**2KJ3410 - ■■■■■ - ■■F1**
56.37	26	8000	49600	4.9	111	5130/91							✓	✓	✓	✓	✓	✓	**2KJ3410 - ■■■■■ - ■■E1**
50.01	29	8000	45600	5.2	73	37960/759					✓	✓	✓	✓	✓	✓	✓	✓	**2KJ3410 - ■■■■■ - ■■D1**
45.30	32	8000	43300	5.2	83	31390/693					✓	✓	✓	✓	✓	✓	✓	✓	**2KJ3410 - ■■■■■ - ■■C1**
39.43	37	7970	41400	5.2	102	29930/759							✓	✓	✓	✓	✓	✓	**2KJ3410 - ■■■■■ - ■■B1**
32.33	45	7510	39000	5.2	135	13870/429							✓	✓	✓	✓	✓	✓	**2KJ3410 - ■■■■■ - ■■A1**

Article No. supplement		
Shaft design	**1 or 9**	see page 10/49
Motor frame size, motor type, efficiency class		see chapter 9
Frequency and voltage	**2 or 9**	see page 11/2
Gearbox mounting type	**A, F, H or D**	see page 10/42

[1] Only in conjunction with reduced-backlash version

© Innomotics 2023

Selection and ordering data

i –	n_2 rpm	T_{2N} Nm	F_{R2} N	φ[1] ‘	J_G 10^{-4} kgm²	R_{ex} –	Motor frame size 63	71	80	90	100	112	132	160	180	200	225	250	Article No. (Article No. supplement, see below)
FZ.169																			
44.93	32	12400	59900	4.2	68	3100/69						✓	✓	✓					**2KJ3311 - ■■■■■ - ■■S1**
41.07	35	13600	55100	4.3	80	616/15						✓	✓	✓	✓				**2KJ3311 - ■■■■■ - ■■R1**
36.94	39	13600	52500	4.3	95	665/18						✓	✓	✓	✓	✓			**2KJ3311 - ■■■■■ - ■■Q1**
33.02	44	13600	49800	4.4	111	2080/63						✓	✓	✓	✓	✓	✓		**2KJ3311 - ■■■■■ - ■■P1**
29.86	49	13600	47500	4.4	133	2060/69						✓	✓	✓	✓	✓	✓		**2KJ3311 - ■■■■■ - ■■N1**
26.35	55	13600	44700	4.4	157	1660/63						✓	✓	✓	✓	✓	✓	✓	**2KJ3311 - ■■■■■ - ■■M1**
23.48	62	13600	42200	4.4	186	540/23						✓	✓	✓	✓	✓	✓	✓	**2KJ3311 - ■■■■■ - ■■L1**
21.27	68	13600	42300	4.3	206	1340/63						✓	✓	✓	✓	✓	✓	✓	**2KJ3311 - ■■■■■ - ■■K1**
19.13	76	13600	42800	4.3	249	440/23							✓	✓	✓	✓	✓	✓	**2KJ3311 - ■■■■■ - ■■J1**
15.90	91	13500	43200	4.4	314	620/39							✓	✓	✓	✓	✓	✓	**2KJ3311 - ■■■■■ - ■■H1**
14.13	103	12900	43200	4.4	386	212/15							✓	✓	✓	✓	✓	✓	**2KJ3311 - ■■■■■ - ■■G1**
11.26	129	11700	42800	4.6	534	980/87							✓	✓	✓	✓	✓	✓	**2KJ3311 - ■■■■■ - ■■F1**
8.97	162	10400	41900	4.8	710	260/29									✓	✓	✓	✓	**2KJ3311 - ■■■■■ - ■■E1**
8.07	180	8350	39300	5.9	396	1364/169							✓	✓	✓	✓	✓	✓	**2KJ3311 - ■■■■■ - ■■D1**
7.18	202	8310	38900	5.9	489	2332/325							✓	✓	✓	✓	✓	✓	**2KJ3311 - ■■■■■ - ■■C1**
5.72	253	8210	37800	6.4	697	2156/377							✓	✓	✓	✓	✓	✓	**2KJ3311 - ■■■■■ - ■■B1**
4.55	319	7300	36400	6.8	967	132/29									✓	✓	✓	✓	**2KJ3311 - ■■■■■ - ■■A1**
FD.169																			
368.00	3.9	13600	73500	4.4	18	106240/289						✓	✓	✓					**2KJ3411 - ■■■■■ - ■■V1**
343.01	4.2	13600	73500	4.4	19	52480/153						✓	✓	✓					**2KJ3411 - ■■■■■ - ■■U1**
304.94	4.8	13600	73500	4.4	24	5184/17						✓	✓	✓					**2KJ3411 - ■■■■■ - ■■T1**
273.80	5.3	13600	73500	4.4	28	51200/187						✓	✓	✓					**2KJ3411 - ■■■■■ - ■■S1**
247.84	5.9	13600	73500	4.4	33	12640/51						✓	✓	✓					**2KJ3411 - ■■■■■ - ■■R1**
217.70	6.7	13600	73500	4.4	40	85120/391						✓	✓	✓					**2KJ3411 - ■■■■■ - ■■Q1**
197.27	7.4	13600	73500	4.4	46	16768/85						✓	✓	✓	✓				**2KJ3411 - ■■■■■ - ■■P1**
175.69	8.3	13600	73500	4.4	54	8960/51						✓	✓	✓	✓	✓			**2KJ3411 - ■■■■■ - ■■N1**
157.76	9.2	13600	73500	4.4	64	56320/357						✓	✓	✓	✓	✓	✓		**2KJ3411 - ■■■■■ - ■■M1**
140.77	10	13600	73500	4.4	74	55040/391						✓	✓	✓	✓	✓	✓		**2KJ3411 - ■■■■■ - ■■L1**
125.49	12	13600	73500	4.4	86	6400/51						✓	✓	✓	✓	✓	✓	✓	**2KJ3411 - ■■■■■ - ■■K1**
111.30	13	13600	73500	4.4	101	2560/23						✓	✓	✓	✓	✓	✓	✓	**2KJ3411 - ■■■■■ - ■■J1**
102.18	14	13600	73500	4.4	113	12160/119						✓	✓	✓	✓	✓	✓	✓	**2KJ3411 - ■■■■■ - ■■H1**
90.03	16	13600	73500	4.4	132	35200/391							✓	✓	✓	✓	✓	✓	**2KJ3411 - ■■■■■ - ■■G1**
73.85	20	13600	71200	4.5	176	960/13							✓	✓	✓	✓	✓	✓	**2KJ3411 - ■■■■■ - ■■F1**
64.75	22	13600	67400	4.5	194	5504/85							✓	✓	✓	✓	✓	✓	**2KJ3411 - ■■■■■ - ■■E1**
50.63	29	13600	60600	4.5	302	24960/493							✓	✓	✓	✓	✓	✓	**2KJ3411 - ■■■■■ - ■■D1**
46.55	31	13600	58300	4.7	201	3026/65							✓	✓	✓	✓	✓	✓	**2KJ3411 - ■■■■■ - ■■C1**
40.82	36	13600	55000	4.7	226	15308/375							✓	✓	✓	✓	✓	✓	**2KJ3411 - ■■■■■ - ■■B1**
31.92	45	13600	53400	4.8	355	4628/145							✓	✓	✓	✓	✓	✓	**2KJ3411 - ■■■■■ - ■■A1**

Article No. supplement		
Shaft design	**1 or 9**	see page 10/49
Motor frame size, motor type, efficiency class		see chapter 9
Frequency and voltage	**2 or 9**	see page 11/2
Gearbox mounting type	**A, F, H or D**	see page 10/42

[1] Only in conjunction with reduced-backlash version

© Innomotics 2023

Transmission ratios and torques

Selection and ordering data

i –	n_2 rpm	T_{2N} Nm	F_{R2} N	φ[1] ‘	J_G 10^{-4} kgm²	R_{ex} –	Motor frame size 63	71	80	90	100	112	132	160	180	200	225	250	Article No. (Article No. supplement, see below)
FZ.189																			
37.93	38	19000	76100	4.0	143	11948/315						✓	✓	✓	✓	✓	✓		**2KJ3312 - ■■■■■ - ■■L1**
34.03	43	19000	72500	4.1	169	3914/115						✓	✓	✓	✓	✓	✓		**2KJ3312 - ■■■■■ - ■■K1**
30.41	48	19000	68900	4.1	202	3193/105						✓	✓	✓	✓	✓	✓	✓	**2KJ3312 - ■■■■■ - ■■J1**
27.17	53	19000	65400	4.1	241	9373/345						✓	✓	✓	✓	✓	✓	✓	**2KJ3312 - ■■■■■ - ■■H1**
24.85	58	19000	62700	4.1	269	7828/315						✓	✓	✓	✓	✓	✓	✓	**2KJ3312 - ■■■■■ - ■■G1**
22.09	66	19000	59300	4.1	321	7622/345							✓	✓	✓	✓	✓	✓	**2KJ3312 - ■■■■■ - ■■F1**
18.75	77	19000	54700	4.2	410	7313/390							✓	✓	✓	✓	✓	✓	**2KJ3312 - ■■■■■ - ■■E1**
16.21	89	19000	50800	4.2	495	6077/375							✓	✓	✓	✓	✓	✓	**2KJ3312 - ■■■■■ - ■■D1**
13.26	109	17600	48700	4.3	687	5768/435							✓	✓	✓	✓	✓	✓	**2KJ3312 - ■■■■■ - ■■C1**
10.89	133	16300	50000	4.4	906	4738/435									✓	✓	✓	✓	**2KJ3312 - ■■■■■ - ■■B1**
8.47	171	14700	50400	4.8	1333	3811/450												✓	**2KJ3312 - ■■■■■ - ■■A1**
FD.189																			
347.35	4.2	19000	110900	4.1	36	590499/1700						✓	✓	✓					**2KJ3412 - ■■■■■ - ■■T1**
310.76	4.7	19000	110900	4.1	43	290563/935						✓	✓	✓					**2KJ3412 - ■■■■■ - ■■S1**
280.27	5.2	19000	110900	4.1	49	571753/2040						✓	✓	✓					**2KJ3412 - ■■■■■ - ■■R1**
247.71	5.9	19000	110900	4.1	61	290563/1173						✓	✓	✓					**2KJ3412 - ■■■■■ - ■■Q1**
226.42	6.4	19000	110900	4.1	71	1443442/6375						✓	✓	✓	✓				**2KJ3412 - ■■■■■ - ■■P1**
203.69	7.1	19000	110900	4.1	84	1246609/6120						✓	✓	✓	✓	✓			**2KJ3412 - ■■■■■ - ■■N1**
182.03	8	19000	110900	4.1	98	139256/765						✓	✓	✓	✓	✓	✓		**2KJ3412 - ■■■■■ - ■■M1**
164.61	8.8	19000	110900	4.1	117	965419/5865						✓	✓	✓	✓	✓	✓		**2KJ3412 - ■■■■■ - ■■L1**
145.28	10	19000	110900	4.1	136	111137/765						✓	✓	✓	✓	✓	✓	✓	**2KJ3412 - ■■■■■ - ■■K1**
129.45	11	19000	110900	4.1	160	253071/1955						✓	✓	✓	✓	✓	✓	✓	**2KJ3412 - ■■■■■ - ■■J1**
117.27	12	19000	110900	4.1	175	89713/765						✓	✓	✓	✓	✓	✓	✓	**2KJ3412 - ■■■■■ - ■■H1**
105.48	14	19000	110900	4.1	210	206206/1955							✓	✓	✓	✓	✓	✓	**2KJ3412 - ■■■■■ - ■■G1**
87.65	17	19000	108200	4.1	258	22351/255							✓	✓	✓	✓	✓	✓	**2KJ3412 - ■■■■■ - ■■F1**
77.92	19	19000	103200	4.1	314	496769/6375							✓	✓	✓	✓	✓	✓	**2KJ3412 - ■■■■■ - ■■E1**
62.11	23	19000	94000	4.2	422	459277/7395							✓	✓	✓	✓	✓	✓	**2KJ3412 - ■■■■■ - ■■D1**
49.43	29	19000	85400	4.2	533	121849/2465									✓	✓	✓	✓	**2KJ3412 - ■■■■■ - ■■C1**
40.61	36	19000	78400	4.4	478	35329/870							✓	✓	✓	✓	✓	✓	**2KJ3412 - ■■■■■ - ■■B1**
32.32	45	19000	70800	4.4	621	9373/290									✓	✓	✓	✓	**2KJ3412 - ■■■■■ - ■■A1**

Article No. supplement		
Shaft design	**1 or 9**	see page 10/49
Motor frame size, motor type, efficiency class		see chapter 9
Frequency and voltage	**2 or 9**	see page 11/2
Gearbox mounting type	**A, F, H or D**	see page 10/42

[1] Only in conjunction with reduced-backlash version

© Innomotics 2023

Selection and ordering data

i –	n_2 rpm	T_{2N} Nm	F_{R2} N	φ [1] ‘	J_G 10^{-4} kgm²	R_{ex} –	Motor frame size 63	71	80	90	100	112	132	160	Article No. (Article No. supplement, see below)
FZ.29-Z19															
1760	0.82	150	5220	–	0.02	1715912/975	✓	✓							**2KJ3320 - ■■■■■ - ■■R1**
1558	0.93	150	5220	–	0.03	2532354/1625	✓	✓	✓						**2KJ3320 - ■■■■■ - ■■Q1**
1354	1.1	150	5220	–	0.04	2200242/1625	✓	✓	✓						**2KJ3320 - ■■■■■ - ■■P1**
1231	1.2	150	5220	–	0.05	400044/325	✓	✓	✓						**2KJ3320 - ■■■■■ - ■■N1**
1047	1.4	150	5220	–	0.07	1702074/1625	✓	✓	✓						**2KJ3320 - ■■■■■ - ■■M1**
952	1.5	150	5220	–	0.08	309468/325	✓	✓	✓						**2KJ3320 - ■■■■■ - ■■L1**
830	1.7	150	5220	–	0.09	20757/25	✓	✓	✓						**2KJ3320 - ■■■■■ - ■■K1**
743	2	150	5220	–	0.12	241536/325	✓	✓	✓						**2KJ3320 - ■■■■■ - ■■J1**
660	2.2	150	5220	–	0.15	214489/325	✓	✓	✓						**2KJ3320 - ■■■■■ - ■■H1**
609	2.4	150	5220	–	0.18	2573868/4225	✓	✓	✓						**2KJ3320 - ■■■■■ - ■■G1**
529	2.7	150	5220	–	0.2	1203906/2275	✓	✓	✓						**2KJ3320 - ■■■■■ - ■■F1**
460	3.2	150	5220	–	0.21	747252/1625	✓	✓	✓						**2KJ3320 - ■■■■■ - ■■E1**
415	3.5	150	5220	–	0.27	20757/50	✓	✓	✓						**2KJ3320 - ■■■■■ - ■■D1**
391	3.7	150	5220	–	0.32	9768/25	✓	✓	✓						**2KJ3320 - ■■■■■ - ■■C1**
340.63	4.3	150	5220	–	0.36	110704/325	✓	✓	✓						**2KJ3320 - ■■■■■ - ■■B1**
314.27	4.6	150	5220	–	0.19	428978/1365	✓	✓	✓						**2KJ3320 - ■■■■■ - ■■A1**
FZ.29-D19															
8237	0.18	150	5220	–	0.03	93697098/11375	✓	✓							**2KJ3321 - ■■■■■ - ■■P1**
7157	0.20	150	5220	–	0.04	81408954/11375	✓	✓							**2KJ3321 - ■■■■■ - ■■N1**
6506	0.22	150	5220	–	0.04	14801628/2275	✓	✓							**2KJ3321 - ■■■■■ - ■■M1**
5536	0.26	150	5220	–	0.06	62976738/11375	✓	✓							**2KJ3321 - ■■■■■ - ■■L1**
5033	0.29	150	5220	–	0.07	11450316/2275	✓	✓							**2KJ3321 - ■■■■■ - ■■K1**
4389	0.33	150	5220	–	0.08	768009/175	✓	✓							**2KJ3321 - ■■■■■ - ■■J1**
3928	0.37	150	5220	–	0.11	8936832/2275	✓	✓							**2KJ3321 - ■■■■■ - ■■H1**
3488	0.42	150	5220	–	0.13	7936093/2275	✓	✓							**2KJ3321 - ■■■■■ - ■■G1**
3220	0.45	150	5220	–	0.16	95233116/29575	✓	✓							**2KJ3321 - ■■■■■ - ■■F1**
2797	0.52	150	5220	–	0.17	44544522/15925	✓	✓							**2KJ3321 - ■■■■■ - ■■E1**
2431	0.60	150	5220	–	0.18	27648324/11375	✓	✓							**2KJ3321 - ■■■■■ - ■■D1**
2194	0.66	150	5220	–	0.22	768009/350	✓	✓							**2KJ3321 - ■■■■■ - ■■C1**
2065	0.70	150	5220	–	0.26	361416/175	✓	✓							**2KJ3321 - ■■■■■ - ■■B1**
1800	0.81	150	5220	–	0.29	4096048/2275	✓	✓							**2KJ3321 - ■■■■■ - ■■A1**

Article No. supplement		
Shaft design	**1 or 9**	see page 10/49
Motor frame size, motor type, efficiency class		see chapter 9
Frequency and voltage	**2 or 9**	see page 11/2
Gearbox mounting type	**A, F, H or D**	see page 10/42

[1] Only in conjunction with reduced-backlash version

© Innomotics 2023

Transmission ratios and torques for very low speeds

Selection and ordering data

i –	n_2 rpm	T_{2N} Nm	F_{R2} N	φ [1] '	J_G 10^{-4} kgm²	R_{ex} –	Motor frame size 63	71	80	90	100	112	132	160	Article No. (Article No. supplement, see below)
FZ.39-Z19															
2028	0.71	230	6040	–	0.02	922746/455	✓	✓							**2KJ3322 - ■■■■■ - ■■T1**
1796	0.81	230	6040	–	0.03	8170767/4550	✓	✓	✓						**2KJ3322 - ■■■■■ - ■■S1**
1560	0.93	230	6040	–	0.04	7099191/4550	✓	✓	✓						**2KJ3322 - ■■■■■ - ■■R1**
1418	1.0	230	6040	–	0.05	645381/455	✓	✓	✓						**2KJ3322 - ■■■■■ - ■■Q1**
1207	1.2	230	6040	–	0.07	5491827/4550	✓	✓	✓						**2KJ3322 - ■■■■■ - ■■P1**
1097	1.3	230	6040	–	0.08	499257/455	✓	✓	✓						**2KJ3322 - ■■■■■ - ■■N1**
957	1.5	230	6040	–	0.09	133947/140	✓	✓	✓						**2KJ3322 - ■■■■■ - ■■M1**
856	1.7	230	6040	–	0.12	389664/455	✓	✓	✓						**2KJ3322 - ■■■■■ - ■■L1**
761	1.9	230	6040	–	0.15	1384119/1820	✓	✓	✓						**2KJ3322 - ■■■■■ - ■■K1**
702	2.1	230	6040	–	0.18	4152357/5915	✓	✓	✓						**2KJ3322 - ■■■■■ - ■■J1**
610	2.4	230	6040	–	0.2	3884463/6370	✓	✓	✓						**2KJ3322 - ■■■■■ - ■■H1**
530	2.7	230	6040	–	0.21	1205523/2275	✓	✓	✓						**2KJ3322 - ■■■■■ - ■■G1**
478	3.0	230	6040	–	0.27	133947/280	✓	✓	✓						**2KJ3322 - ■■■■■ - ■■F1**
450	3.2	230	6040	–	0.32	267894/595	✓	✓	✓						**2KJ3322 - ■■■■■ - ■■E1**
393	3.7	230	6040	–	0.36	178596/455	✓	✓	✓						**2KJ3322 - ■■■■■ - ■■D1**
362	4.0	230	6040	–	0.19	461373/1274	✓	✓	✓						**2KJ3322 - ■■■■■ - ■■C1**
314.58	4.6	230	6040	–	0.22	431607/1372	✓	✓	✓						**2KJ3322 - ■■■■■ - ■■B1**
273.36	5.3	230	6040	–	0.23	133947/490	✓	✓	✓						**2KJ3322 - ■■■■■ - ■■A1**
FZ.39-D19															
8247	0.18	230	6040	–	0.04	262670067/31850	✓	✓							**2KJ3323 - ■■■■■ - ■■N1**
7497	0.19	230	6040	–	0.04	23879097/3185	✓	✓							**2KJ3323 - ■■■■■ - ■■M1**
6380	0.23	230	6040	–	0.06	203197599/31850	✓	✓							**2KJ3323 - ■■■■■ - ■■L1**
5800	0.25	230	6040	–	0.07	18472509/3185	✓	✓							**2KJ3323 - ■■■■■ - ■■K1**
5057	0.29	230	6040	–	0.08	4956039/980	✓	✓							**2KJ3323 - ■■■■■ - ■■J1**
4527	0.32	230	6040	–	0.11	14417568/3185	✓	✓							**2KJ3323 - ■■■■■ - ■■H1**
4020	0.36	230	6040	–	0.13	51212403/12740	✓	✓							**2KJ3323 - ■■■■■ - ■■G1**
3711	0.39	230	6040	–	0.16	153637209/41405	✓	✓							**2KJ3323 - ■■■■■ - ■■F1**
3223	0.45	230	6040	–	0.17	143725131/44590	✓	✓							**2KJ3323 - ■■■■■ - ■■E1**
2801	0.52	230	6040	–	0.18	44604351/15925	✓	✓							**2KJ3323 - ■■■■■ - ■■D1**
2529	0.57	230	6040	–	0.22	4956039/1960	✓	✓							**2KJ3323 - ■■■■■ - ■■C1**
2380	0.61	230	6040	–	0.26	9912078/4165	✓	✓							**2KJ3323 - ■■■■■ - ■■B1**
2075	0.7	230	6040	–	0.29	6608052/3185	✓	✓							**2KJ3323 - ■■■■■ - ■■A1**

Article No. supplement		
Shaft design	**1 or 9**	see page 10/49
Motor frame size, motor type, efficiency class		see chapter 9
Frequency and voltage	**2 or 9**	see page 11/2
Gearbox mounting type	**A, F, H or D**	see page 10/42

[1] Only in conjunction with reduced-backlash version

© Innomotics 2023

Selection and ordering data

i –	n_2 rpm	T_{2N} Nm	F_{R2} N	φ [1] '	J_G 10^{-4} kgm²	R_{ex} –	Motor frame size 63	71	80	90	100	112	132	160	Article No. (Article No. supplement, see below)
FZ.49-Z19															
2149	0.67	480	7960	–	0.02	1256926/585	✓	✓							**2KJ3324 - ■■■■■ - ■■J1**
1903	0.76	480	7960	–	0.03	1236653/650	✓	✓	✓						**2KJ3324 - ■■■■■ - ■■H1**
1653	0.88	480	7960	–	0.04	1074469/650	✓	✓	✓						**2KJ3324 - ■■■■■ - ■■G1**
1503	0.96	480	7960	–	0.05	97679/65	✓	✓	✓						**2KJ3324 - ■■■■■ - ■■F1**
1279	1.1	480	7960	–	0.07	831193/650	✓	✓	✓						**2KJ3324 - ■■■■■ - ■■E1**
1163	1.2	480	7960	–	0.08	75563/65	✓	✓	✓						**2KJ3324 - ■■■■■ - ■■D1**
1014	1.4	480	7960	–	0.09	20273/20	✓	✓	✓						**2KJ3324 - ■■■■■ - ■■C1**
907	1.6	480	7960	–	0.13	58976/65	✓	✓	✓						**2KJ3324 - ■■■■■ - ■■B1**
806	1.8	480	7960	–	0.15	628463/780	✓	✓	✓						**2KJ3324 - ■■■■■ - ■■A1**
FZ.49-D19															
11357	0.13	480	7960	–	0.02	46506262/4095	✓	✓							**2KJ3325 - ■■■■■ - ■■Q1**
10056	0.14	480	7960	–	0.03	45756161/4550	✓	✓							**2KJ3325 - ■■■■■ - ■■P1**
8737	0.17	480	7960	–	0.04	39755353/4550	✓	✓							**2KJ3325 - ■■■■■ - ■■N1**
7943	0.18	480	7960	–	0.04	3614123/455	✓	✓							**2KJ3325 - ■■■■■ - ■■M1**
6759	0.21	480	7960	–	0.06	30754141/4550	✓	✓							**2KJ3325 - ■■■■■ - ■■L1**
6145	0.24	480	7960	–	0.07	2795831/455	✓	✓							**2KJ3325 - ■■■■■ - ■■K1**
5358	0.27	480	7960	–	0.08	750101/140	✓	✓							**2KJ3325 - ■■■■■ - ■■J1**
4796	0.3	480	7960	–	0.11	2182112/455	✓	✓							**2KJ3325 - ■■■■■ - ■■H1**
4259	0.34	480	7960	–	0.13	23253131/5460	✓	✓							**2KJ3325 - ■■■■■ - ■■G1**
3931	0.37	480	7960	–	0.16	23253131/5915	✓	✓							**2KJ3325 - ■■■■■ - ■■F1**
3415	0.42	480	7960	–	0.17	21752929/6370	✓	✓							**2KJ3325 - ■■■■■ - ■■E1**
2967	0.49	480	7960	–	0.18	6750909/2275	✓	✓							**2KJ3325 - ■■■■■ - ■■D1**
2679	0.54	480	7960	–	0.22	750101/280	✓	✓							**2KJ3325 - ■■■■■ - ■■C1**
2521	0.58	480	7960	–	0.26	1500202/595	✓	✓							**2KJ3325 - ■■■■■ - ■■B1**
2198	0.66	480	7960	–	0.29	3000404/1365	✓	✓							**2KJ3325 - ■■■■■ - ■■A1**
FD.49-Z19															
752	1.9	480	7960	–	0.21	3762/5	✓	✓	✓						**2KJ3424 - ■■■■■ - ■■J1**
679	2.1	480	7960	–	0.28	2717/4	✓	✓	✓						**2KJ3424 - ■■■■■ - ■■H1**
639	2.3	480	7960	–	0.32	10868/17	✓	✓	✓						**2KJ3424 - ■■■■■ - ■■G1**
557	2.6	480	7960	–	0.37	1672/3	✓	✓	✓						**2KJ3424 - ■■■■■ - ■■F1**
514	2.8	480	7960	–	0.20	32395/63	✓	✓	✓						**2KJ3424 - ■■■■■ - ■■E1**
447	3.2	480	7960	–	0.23	393965/882	✓	✓	✓						**2KJ3424 - ■■■■■ - ■■D1**
388	3.7	480	7960	–	0.25	2717/7	✓	✓	✓						**2KJ3424 - ■■■■■ - ■■C1**
350	4.1	480	7960	–	0.32	176605/504	✓	✓	✓						**2KJ3424 - ■■■■■ - ■■B1**
329.79	4.4	480	7960	–	0.37	353210/1071	✓	✓	✓						**2KJ3424 - ■■■■■ - ■■A1**
FD.49-D19															
14685	0.10	480	7960	–	0.07	14699730/1001	✓	✓							**2KJ3425 - ■■■■■ - ■■C1**
12805	0.11	480	7960	–	0.08	179265/14	✓	✓							**2KJ3425 - ■■■■■ - ■■B1**
11461	0.13	480	7960	–	0.11	11472960/1001	✓	✓							**2KJ3425 - ■■■■■ - ■■A1**

Article No. supplement		
Shaft design	**1 or 9**	see page 10/49
Motor frame size, motor type, efficiency class		see chapter 9
Frequency and voltage	**2 or 9**	see page 11/2
Gearbox mounting type	**A, F, H or D**	see page 10/42

[1] Only in conjunction with reduced-backlash version

© Innomotics 2023

Transmission ratios and torques for very low speeds

Selection and ordering data

i –	n_2 rpm	T_{2N} Nm	F_{R2} N	φ [1] '	J_G 10^{-4} kgm²	R_{ex} –	Motor frame size 63	71	80	90	100	112	132	160	Article No. (Article No. supplement, see below)
FZ.69-Z19															
2262	0.64	600	10800	–	0.02	264616/117	✓	✓							**2KJ3326 - ■■■■■ - ■■F1**
2003	0.72	600	10800	–	0.03	130174/65	✓	✓	✓						**2KJ3326 - ■■■■■ - ■■E1**
1740	0.83	600	10800	–	0.04	113102/65	✓	✓	✓						**2KJ3326 - ■■■■■ - ■■D1**
1582	0.92	600	10800	–	0.05	20564/13	✓	✓	✓						**2KJ3326 - ■■■■■ - ■■C1**
1346	1.1	600	10800	–	0.07	87494/65	✓	✓	✓						**2KJ3326 - ■■■■■ - ■■B1**
1224	1.2	600	10800	–	0.08	15908/13	✓	✓	✓						**2KJ3326 - ■■■■■ - ■■A1**
FZ.69-D19															
11955	0.12	600	10800	–	0.02	9790792/819	✓	✓							**2KJ3327 - ■■■■■ - ■■Q1**
10586	0.14	600	10800	–	0.03	4816438/455	✓	✓							**2KJ3327 - ■■■■■ - ■■P1**
9197	0.16	600	10800	–	0.04	4184774/455	✓	✓							**2KJ3327 - ■■■■■ - ■■N1**
8361	0.17	600	10800	–	0.04	760868/91	✓	✓							**2KJ3327 - ■■■■■ - ■■M1**
7115	0.20	600	10800	–	0.06	3237278/455	✓	✓							**2KJ3327 - ■■■■■ - ■■L1**
6468	0.22	600	10800	–	0.07	588596/91	✓	✓							**2KJ3327 - ■■■■■ - ■■K1**
5640	0.26	600	10800	–	0.08	39479/7	✓	✓							**2KJ3327 - ■■■■■ - ■■J1**
5048	0.29	600	10800	–	0.11	459392/91	✓	✓							**2KJ3327 - ■■■■■ - ■■H1**
4483	0.32	600	10800	–	0.13	1223849/273	✓	✓							**2KJ3327 - ■■■■■ - ■■G1**
4138	0.35	600	10800	–	0.16	4895396/1183	✓	✓							**2KJ3327 - ■■■■■ - ■■F1**
3595	0.4	600	10800	–	0.17	2289782/637	✓	✓							**2KJ3327 - ■■■■■ - ■■E1**
3124	0.46	600	10800	–	0.18	1421244/455	✓	✓							**2KJ3327 - ■■■■■ - ■■D1**
2820	0.51	600	10800	–	0.22	39479/14	✓	✓							**2KJ3327 - ■■■■■ - ■■C1**
2654	0.55	600	10800	–	0.26	315832/119	✓	✓							**2KJ3327 - ■■■■■ - ■■B1**
2314	0.63	600	10800	–	0.29	631664/273	✓	✓							**2KJ3327 - ■■■■■ - ■■A1**
FD.69-Z19															
1200	1.2	600	10800	–	0.32	1200/1	✓	✓	✓						**2KJ3426 - ■■■■■ - ■■M1**
1046	1.4	600	10800	–	0.37	13600/13	✓	✓	✓						**2KJ3426 - ■■■■■ - ■■L1**
965	1.5	600	10800	–	0.19	263500/273	✓	✓	✓						**2KJ3426 - ■■■■■ - ■■K1**
838	1.7	600	10800	–	0.22	123250/147	✓	✓	✓						**2KJ3426 - ■■■■■ - ■■J1**
729	2.0	600	10800	–	0.23	5100/7	✓	✓	✓						**2KJ3426 - ■■■■■ - ■■H1**
658	2.2	600	10800	–	0.30	27625/42	✓	✓	✓						**2KJ3426 - ■■■■■ - ■■G1**
619	2.3	600	10800	–	0.35	13000/21	✓	✓	✓						**2KJ3426 - ■■■■■ - ■■F1**
587	2.5	600	10800	–	0.37	1760/3	✓	✓	✓						**2KJ3426 - ■■■■■ - ■■E1**
541	2.7	600	10800	–	0.20	34100/63	✓	✓	✓						**2KJ3426 - ■■■■■ - ■■D1**
470	3.1	600	10800	–	0.23	207350/441	✓	✓	✓						**2KJ3426 - ■■■■■ - ■■C1**
409	3.5	600	10800	–	0.25	2860/7	✓	✓	✓						**2KJ3426 - ■■■■■ - ■■B1**
369	3.9	600	10800	–	0.32	46475/126	✓	✓	✓						**2KJ3426 - ■■■■■ - ■■A1**
FD.69-D19															
13479	0.11	600	10800	–	0.08	94350/7	✓	✓							**2KJ3427 - ■■■■■ - ■■B1**
12065	0.12	600	10800	–	0.11	12076800/1001	✓	✓							**2KJ3427 - ■■■■■ - ■■A1**

Article No. supplement		
Shaft design	**1 or 9**	see page 10/49
Motor frame size, motor type, efficiency class		see chapter 9
Frequency and voltage	**2 or 9**	see page 11/2
Gearbox mounting type	**A, F, H or D**	see page 10/42

[1] Only in conjunction with reduced-backlash version

© Innomotics 2023

Selection and ordering data

i –	n_2 rpm	T_{2N} Nm	F_{R2} N	φ [1] '	J_G 10^{-4} kgm²	R_{ex} –	Motor frame size 63	71	80	90	100	112	132	160	Article No. (Article No. supplement, see below)
FZ.79-Z39															
2687	0.54	1000	13600	–	0.06	13059137/4860	✓	✓							**2KJ3328 - ■■■■■ - ■■S2**
2389	0.61	1000	13600	–	0.07	6450899/2700	✓	✓	✓	✓					**2KJ3328 - ■■■■■ - ■■R1**
2098	0.69	1000	13600	–	0.08	157339/75	✓	✓	✓	✓					**2KJ3328 - ■■■■■ - ■■Q1**
1907	0.76	1000	13600	–	0.10	314678/165	✓	✓	✓	✓					**2KJ3328 - ■■■■■ - ■■P1**
1632	0.89	1000	13600	–	0.12	1101373/675	✓	✓	✓	✓					**2KJ3328 - ■■■■■ - ■■N1**
1483	0.98	1000	13600	–	0.14	2202746/1485	✓	✓	✓	✓					**2KJ3328 - ■■■■■ - ■■M1**
1311	1.1	1000	13600	–	0.17	157339/120	✓	✓	✓	✓	✓				**2KJ3328 - ■■■■■ - ■■L1**
1192	1.2	1000	13600	–	0.22	157339/132	✓	✓	✓	✓	✓				**2KJ3328 - ■■■■■ - ■■K1**
1044	1.4	1000	13600	–	0.26	6765577/6480	✓	✓	✓	✓	✓				**2KJ3328 - ■■■■■ - ■■J1**
964	1.5	1000	13600	–	0.31	520429/540	✓	✓	✓	✓	✓				**2KJ3328 - ■■■■■ - ■■H1**
853	1.7	1000	13600	–	0.36	921557/1080	✓	✓	✓	✓	✓				**2KJ3328 - ■■■■■ - ■■G1**
710	2.0	1000	13600	–	0.48	2045407/2880	✓	✓	✓	✓	✓				**2KJ3328 - ■■■■■ - ■■F1**
668	2.2	1000	13600	–	0.56	2045407/3060	✓	✓	✓	✓	✓				**2KJ3328 - ■■■■■ - ■■E1**
599	2.4	1000	13600	–	0.61	5821543/9720	✓	✓	✓	✓	✓				**2KJ3328 - ■■■■■ - ■■D1**
510	2.8	1000	13600	–	0.79	1101373/2160	✓	✓	✓	✓	✓				**2KJ3328 - ■■■■■ - ■■C1**
437	3.3	1000	13600	–	1.03	157339/360			✓	✓	✓				**2KJ3328 - ■■■■■ - ■■B1**
376	3.9	1000	13600	–	1.31	4877509/12960			✓	✓	✓				**2KJ3328 - ■■■■■ - ■■A1**
FZ.79-D39															
11301	0.13	1000	13600	–	0.03	155608271/13770	✓	✓							**2KJ3330 - ■■■■■ - ■■N1**
10023	0.14	1000	13600	–	0.05	6765577/675	✓	✓	✓	✓					**2KJ3330 - ■■■■■ - ■■M1**
8696	0.17	1000	13600	–	0.05	399169043/45900	✓	✓	✓	✓					**2KJ3330 - ■■■■■ - ■■L1**
7906	0.18	1000	13600	–	0.07	399169043/50490	✓	✓	✓	✓					**2KJ3330 - ■■■■■ - ■■K1**
6780	0.21	1000	13600	–	0.08	155608271/22950	✓	✓	✓	✓					**2KJ3330 - ■■■■■ - ■■J1**
6164	0.24	1000	13600	–	0.10	155608271/25245	✓	✓	✓	✓					**2KJ3330 - ■■■■■ - ■■H1**
5405	0.27	1000	13600	–	0.12	74421347/13770	✓	✓	✓	✓	✓				**2KJ3330 - ■■■■■ - ■■G1**
4824	0.30	1000	13600	–	0.15	13531154/2805	✓	✓	✓	✓	✓				**2KJ3330 - ■■■■■ - ■■F1**
4299	0.34	1000	13600	–	0.17	47359039/11016	✓	✓	✓	✓	✓				**2KJ3330 - ■■■■■ - ■■E1**
3968	0.37	1000	13600	–	0.21	3643003/918	✓	✓	✓	✓	✓				**2KJ3330 - ■■■■■ - ■■D1**
3474	0.42	1000	13600	–	0.25	10631621/3060	✓	✓	✓	✓	✓				**2KJ3330 - ■■■■■ - ■■C1**
3046	0.48	1000	13600	–	0.23	209732887/68850	✓	✓	✓	✓	✓				**2KJ3330 - ■■■■■ - ■■B1**
2764	0.52	1000	13600	–	0.33	6765577/2448	✓	✓	✓	✓	✓				**2KJ3330 - ■■■■■ - ■■A1**
FD.79-D39															
17865	0.08	1000	13600	–	0.08	583103521/32640	✓	✓	✓	✓					**2KJ3430 - ■■■■■ - ■■E1**
16241	0.09	1000	13600	–	0.10	53009411/3264	✓	✓	✓	✓					**2KJ3430 - ■■■■■ - ■■D1**
14240	0.10	1000	13600	–	0.12	278875597/19584	✓	✓	✓	✓	✓				**2KJ3430 - ■■■■■ - ■■C1**
12710	0.11	1000	13600	–	0.15	6914271/544	✓	✓	✓	✓	✓				**2KJ3430 - ■■■■■ - ■■B1**
11327	0.13	1000	13600	–	0.17	887331445/78336	✓	✓	✓	✓	✓				**2KJ3430 - ■■■■■ - ■■A1**

Article No. supplement		
Shaft design	**1 or 9**	see page 10/49
Motor frame size, motor type, efficiency class		see chapter 9
Frequency and voltage	**2 or 9**	see page 11/2
Gearbox mounting type	**A, F, H or D**	see page 10/42

[1] Only in conjunction with reduced-backlash version

© Innomotics 2023

Transmission ratios and torques for very low speeds

Selection and ordering data

i –	n_2 rpm	T_{2N} Nm	F_{R2} N	φ [1] '	J_G 10^{-4} kgm²	R_{ex} –	Motor frame size 63	71	80	90	100	112	132	160	Article No. (Article No. supplement, see below)
FZ.89-Z39															
3453	0.42	1850	17400	–	0.06	1398467/405	✓	✓							**2KJ3331 - ■■■■■ - ■■P1**
3070	0.47	1850	17400	–	0.07	690809/225	✓	✓	✓	✓					**2KJ3331 - ■■■■■ - ■■N1**
2696	0.54	1850	17400	–	0.08	67396/25	✓	✓	✓	✓					**2KJ3331 - ■■■■■ - ■■M1**
2451	0.59	1850	17400	–	0.10	134792/55	✓	✓	✓	✓					**2KJ3331 - ■■■■■ - ■■L1**
2097	0.69	1850	17400	–	0.12	471772/225	✓	✓	✓	✓					**2KJ3331 - ■■■■■ - ■■K1**
1906	0.76	1850	17400	–	0.14	943544/495	✓	✓	✓	✓					**2KJ3331 - ■■■■■ - ■■J1**
1685	0.86	1850	17400	–	0.17	16849/10	✓	✓	✓	✓	✓				**2KJ3331 - ■■■■■ - ■■H1**
1532	0.95	1850	17400	–	0.22	16849/11	✓	✓	✓	✓	✓				**2KJ3331 - ■■■■■ - ■■G1**
1342	1.1	1850	17400	–	0.26	724507/540	✓	✓	✓	✓	✓				**2KJ3331 - ■■■■■ - ■■F1**
1238	1.2	1850	17400	–	0.31	724507/585	✓	✓	✓	✓	✓				**2KJ3331 - ■■■■■ - ■■E1**
1097	1.3	1850	17400	–	0.36	98687/90	✓	✓	✓	✓	✓				**2KJ3331 - ■■■■■ - ■■D1**
913	1.6	1850	17400	–	0.48	219037/240	✓	✓	✓	✓	✓				**2KJ3331 - ■■■■■ - ■■C1**
859	1.7	1850	17400	–	0.56	219037/255	✓	✓	✓	✓	✓				**2KJ3331 - ■■■■■ - ■■B1**
770	1.9	1850	17400	–	0.61	623413/810	✓	✓	✓	✓	✓				**2KJ3331 - ■■■■■ - ■■A1**
FZ.89-D39															
14522	0.1	1850	17400	–	0.03	33327322/2295	✓	✓							**2KJ3332 - ■■■■■ - ■■N1**
12880	0.11	1850	17400	–	0.05	2898028/225	✓	✓	✓	✓					**2KJ3332 - ■■■■■ - ■■M1**
11175	0.13	1850	17400	–	0.05	42745913/3825	✓	✓	✓	✓					**2KJ3332 - ■■■■■ - ■■L1**
10159	0.14	1850	17400	–	0.07	85491826/8415	✓	✓	✓	✓					**2KJ3332 - ■■■■■ - ■■K1**
8713	0.17	1850	17400	–	0.08	33327322/3825	✓	✓	✓	✓					**2KJ3332 - ■■■■■ - ■■J1**
7921	0.18	1850	17400	–	0.10	66654644/8415	✓	✓	✓	✓					**2KJ3332 - ■■■■■ - ■■H1**
6945	0.21	1850	17400	–	0.12	15939154/2295	✓	✓	✓	✓	✓				**2KJ3332 - ■■■■■ - ■■G1**
6299	0.23	1850	17400	–	0.15	5796056/935	✓	✓	✓	✓	✓				**2KJ3332 - ■■■■■ - ■■F1**
5525	0.26	1850	17400	–	0.17	5071549/918	✓	✓	✓	✓	✓				**2KJ3332 - ■■■■■ - ■■E1**
5100	0.28	1850	17400	–	0.21	10143098/1989	✓	✓	✓	✓	✓				**2KJ3332 - ■■■■■ - ■■D1**
4465	0.32	1850	17400	–	0.25	1138511/255	✓	✓	✓	✓	✓				**2KJ3332 - ■■■■■ - ■■C1**
3915	0.37	1850	17400	–	0.23	44919434/11475	✓	✓	✓	✓	✓				**2KJ3332 - ■■■■■ - ■■B1**
3552	0.41	1850	17400	–	0.33	724507/204	✓	✓	✓	✓	✓				**2KJ3332 - ■■■■■ - ■■A1**
FD.89-Z39															
648	2.2	1850	17400	–	0.75	47389680/73117	✓	✓	✓	✓	✓				**2KJ3431 - ■■■■■ - ■■E1**
581	2.5	1850	17400	–	0.85	7493240/12903	✓	✓	✓	✓	✓				**2KJ3431 - ■■■■■ - ■■D1**
494	2.9	1850	17400	–	1.12	2126460/4301	✓	✓	✓	✓	✓				**2KJ3431 - ■■■■■ - ■■C1**
424	3.4	1850	17400	–	1.48	1822680/4301			✓	✓	✓				**2KJ3431 - ■■■■■ - ■■B1**
365	4	1850	17400	–	1.91	1569530/4301			✓	✓	✓				**2KJ3431 - ■■■■■ - ■■A1**
FD.89-D39															
17750	0.08	1850	17400	–	0.12	15389528/867	✓	✓	✓	✓	✓				**2KJ3432 - ■■■■■ - ■■B1**
15843	0.09	1850	17400	–	0.15	50365728/3179	✓	✓	✓	✓	✓				**2KJ3432 - ■■■■■ - ■■A1**

Article No. supplement		
Shaft design	**1 or 9**	see page 10/49
Motor frame size, motor type, efficiency class		see chapter 9
Frequency and voltage	**2 or 9**	see page 11/2
Gearbox mounting type	**A, F, H or D**	see page 10/42

[1] Only in conjunction with reduced-backlash version

© Innomotics 2023

Selection and ordering data

i –	n_2 rpm	T_{2N} Nm	F_{R2} N	φ [1] '	J_G 10^{-4} kgm²	R_{ex} –	Motor frame size 63	71	80	90	100	112	132	160	Article No. (Article No. supplement, see below)
FD.109-Z39															
7014	0.21	3100	25000	–	0.06	2940126098/419175	✓	✓							**2KJ3433 - ■■■■■ - ■■A2**
6237	0.23	3100	25000	–	0.07	1452351446/232875	✓	✓	✓	✓					**2KJ3433 - ■■■■■ - ■■X1**
5476	0.26	3100	25000	–	0.09	141692824/25875	✓	✓	✓	✓					**2KJ3433 - ■■■■■ - ■■W1**
4978	0.29	3100	25000	–	0.10	283385648/56925	✓	✓	✓	✓					**2KJ3433 - ■■■■■ - ■■V1**
4259	0.34	3100	25000	–	0.12	991849768/232875	✓	✓	✓	✓					**2KJ3433 - ■■■■■ - ■■U1**
3872	0.37	3100	25000	–	0.15	1983699536/512325	✓	✓	✓	✓					**2KJ3433 - ■■■■■ - ■■T1**
3423	0.42	3100	25000	–	0.17	17711603/5175	✓	✓	✓	✓	✓				**2KJ3433 - ■■■■■ - ■■S1**
3111	0.47	3100	25000	–	0.23	35423206/11385	✓	✓	✓	✓	✓				**2KJ3433 - ■■■■■ - ■■R1**
2725	0.53	3100	25000	–	0.27	761598929/279450	✓	✓	✓	✓	✓				**2KJ3433 - ■■■■■ - ■■Q1**
2516	0.58	3100	25000	–	0.32	117169066/46575	✓	✓	✓	✓	✓				**2KJ3433 - ■■■■■ - ■■P1**
2227	0.65	3100	25000	–	0.38	103739389/46575	✓	✓	✓	✓	✓				**2KJ3433 - ■■■■■ - ■■N1**
1854	0.78	3100	25000	–	0.50	230250839/124200	✓	✓	✓	✓	✓				**2KJ3433 - ■■■■■ - ■■M1**
1745	0.83	3100	25000	–	0.59	27088334/15525	✓	✓	✓	✓	✓				**2KJ3433 - ■■■■■ - ■■L1**
1563	0.93	3100	25000	–	0.64	655329311/419175	✓	✓	✓	✓	✓				**2KJ3433 - ■■■■■ - ■■K1**
1331	1.1	3100	25000	–	0.84	123981221/93150	✓	✓	✓	✓	✓				**2KJ3433 - ■■■■■ - ■■J1**
1141	1.3	3100	25000	–	1.10	17711603/15525			✓	✓	✓				**2KJ3433 - ■■■■■ - ■■H1**
982	1.5	3100	25000	–	1.40	549059693/558900			✓	✓	✓				**2KJ3433 - ■■■■■ - ■■G1**
810	1.8	3100	25000	–	0.73	154343969/190440	✓	✓	✓	✓	✓				**2KJ3433 - ■■■■■ - ■■F1**
763	1.9	3100	25000	–	0.84	18158114/23805	✓	✓	✓	✓	✓				**2KJ3433 - ■■■■■ - ■■E1**
683	2.1	3100	25000	–	0.96	439286681/642735	✓	✓	✓	✓	✓				**2KJ3433 - ■■■■■ - ■■D1**
582	2.5	3100	25000	–	1.28	83108291/142830	✓	✓	✓	✓	✓				**2KJ3433 - ■■■■■ - ■■C1**
499	2.9	3100	25000	–	1.70	11872613/23805			✓	✓	✓				**2KJ3433 - ■■■■■ - ■■B1**
429	3.4	3100	25000	–	2.20	368051003/856980			✓	✓	✓				**2KJ3433 - ■■■■■ - ■■A1**
FD.109-D39															
22701	0.06	3100	25000	–	0.05	5286392566/232875	✓	✓	✓	✓					**2KJ3434 - ■■■■■ - ■■L1**
20637	0.07	3100	25000	–	0.07	10572785132/512325	✓	✓	✓	✓					**2KJ3434 - ■■■■■ - ■■K1**
17699	0.08	3100	25000	–	0.08	179199748/10125	✓	✓	✓	✓					**2KJ3434 - ■■■■■ - ■■J1**
16090	0.09	3100	25000	–	0.10	358399496/22275	✓	✓	✓	✓					**2KJ3434 - ■■■■■ - ■■H1**
14108	0.10	3100	25000	–	0.12	1971197228/139725	✓	✓	✓	✓	✓				**2KJ3434 - ■■■■■ - ■■G1**
12592	0.12	3100	25000	–	0.15	716798992/56925	✓	✓	✓	✓	✓				**2KJ3434 - ■■■■■ - ■■F1**
11222	0.13	3100	25000	–	0.18	313599559/27945	✓	✓	✓	✓	✓				**2KJ3434 - ■■■■■ - ■■E1**
10359	0.14	3100	25000	–	0.21	96492172/9315	✓	✓	✓	✓	✓				**2KJ3434 - ■■■■■ - ■■D1**
9069	0.16	3100	25000	–	0.25	140799802/15525	✓	✓	✓	✓	✓				**2KJ3434 - ■■■■■ - ■■C1**
7952	0.18	3100	25000	–	0.23	5555192188/698625	✓	✓	✓	✓	✓				**2KJ3434 - ■■■■■ - ■■B1**
7214	0.2	3100	25000	–	0.33	44799937/6210	✓	✓	✓	✓	✓				**2KJ3434 - ■■■■■ - ■■A1**

Article No. supplement		
Shaft design	**1 or 9**	see page 10/49
Motor frame size, motor type, efficiency class		see chapter 9
Frequency and voltage	**2 or 9**	see page 11/2
Gearbox mounting type	**A, F, H or D**	see page 10/42

[1] Only in conjunction with reduced-backlash version

© Innomotics 2023

Transmission ratios and torques for very low speeds

Selection and ordering data

i –	n_2 rpm	T_{2N} Nm	F_{R2} N	φ [1] '	J_G 10^{-4} kgm²	R_{ex} –	Motor frame size 63	71	80	90	100	112	132	160	Article No. (Article No. supplement, see below)
FD.129-Z49															
6604	0.22	4850	37200	–	0.18	177513589/26880	✓	✓	✓	✓					**2KJ3435 - ■■■■■ - ■■B2**
6004	0.24	4850	37200	–	0.21	16137599/2688	✓	✓	✓	✓					**2KJ3435 - ■■■■■ - ■■A2**
5106	0.28	4850	37200	–	0.27	9150185/1792	✓	✓	✓	✓					**2KJ3435 - ■■■■■ - ■■X1**
4642	0.31	4850	37200	–	0.32	4159175/896	✓	✓	✓	✓					**2KJ3435 - ■■■■■ - ■■W1**
4142	0.35	4850	37200	–	0.38	133592701/32256	✓	✓	✓	✓	✓	✓			**2KJ3435 - ■■■■■ - ■■V1**
3714	0.39	4850	37200	–	0.45	831835/224	✓	✓	✓	✓	✓	✓			**2KJ3435 - ■■■■■ - ■■U1**
3347	0.43	4850	37200	–	0.53	107972183/32256	✓	✓	✓	✓	✓	✓			**2KJ3435 - ■■■■■ - ■■T1**
3090	0.47	4850	37200	–	0.63	107972183/34944	✓	✓	✓	✓	✓	✓			**2KJ3435 - ■■■■■ - ■■S1**
2821	0.51	4850	37200	–	0.75	53071073/18816	✓	✓	✓	✓	✓	✓	✓		**2KJ3435 - ■■■■■ - ■■R1**
2340	0.62	4850	37200	–	0.95	100652035/43008	✓	✓	✓	✓	✓	✓	✓		**2KJ3435 - ■■■■■ - ■■Q1**
2203	0.66	4850	37200	–	1.10	100652035/45696	✓	✓	✓	✓	✓	✓	✓		**2KJ3435 - ■■■■■ - ■■P1**
2080	0.70	4850	37200	–	1.25	100652035/48384	✓	✓	✓	✓	✓	✓	✓		**2KJ3435 - ■■■■■ - ■■N1**
1770	0.82	4850	37200	–	1.53	23790481/13440	✓	✓	✓	✓	✓	✓	✓		**2KJ3435 - ■■■■■ - ■■M1**
1516	0.96	4850	37200	–	1.89	1164569/768			✓	✓	✓	✓	✓		**2KJ3435 - ■■■■■ - ■■L1**
1333	1.1	4850	37200	–	2.3	86011739/64512			✓	✓	✓	✓	✓		**2KJ3435 - ■■■■■ - ■■K1**
1125	1.3	4850	37200	–	2.9	34770703/30912			✓	✓	✓	✓	✓		**2KJ3435 - ■■■■■ - ■■J1**
980	1.5	4850	37200	–	3.9	5490111/5600			✓	✓	✓	✓	✓		**2KJ3435 - ■■■■■ - ■■H1**
967	1.5	4850	37200	–	1.51	27620791/28560	✓	✓	✓	✓	✓	✓	✓		**2KJ3435 - ■■■■■ - ■■G1**
913	1.6	4850	37200	–	1.71	27620791/30240	✓	✓	✓	✓	✓	✓	✓		**2KJ3435 - ■■■■■ - ■■F1**
777	1.9	4850	37200	–	2.2	32642753/42000	✓	✓	✓	✓	✓	✓	✓		**2KJ3435 - ■■■■■ - ■■E1**
666	2.2	4850	37200	–	2.8	1597897/2400			✓	✓	✓	✓	✓		**2KJ3435 - ■■■■■ - ■■D1**
585	2.5	4850	37200	–	3.5	118016107/201600			✓	✓	✓	✓	✓		**2KJ3435 - ■■■■■ - ■■C1**
494	2.9	4850	37200	–	4.5	47708639/96600			✓	✓	✓	✓	✓		**2KJ3435 - ■■■■■ - ■■B1**
430	3.4	4850	37200	–	6.0	7532943/17500			✓	✓	✓	✓	✓		**2KJ3435 - ■■■■■ - ■■A1**
FD.129-D49															
27777	0.05	4850	37200	–	0.08	31110629/1120	✓	✓	✓	✓					**2KJ3436 - ■■■■■ - ■■N1**
25252	0.06	4850	37200	–	0.10	2828239/112	✓	✓	✓	✓					**2KJ3436 - ■■■■■ - ■■M1**
21605	0.07	4850	37200	–	0.12	31110629/1440	✓	✓	✓	✓					**2KJ3436 - ■■■■■ - ■■L1**
19641	0.07	4850	37200	–	0.14	2828239/144	✓	✓	✓	✓					**2KJ3436 - ■■■■■ - ■■K1**
17361	0.08	4850	37200	–	0.17	31110629/1792	✓	✓	✓	✓	✓	✓			**2KJ3436 - ■■■■■ - ■■J1**
15783	0.09	4850	37200	–	0.22	14141195/896	✓	✓	✓	✓	✓	✓			**2KJ3436 - ■■■■■ - ■■H1**
13824	0.10	4850	37200	–	0.26	1337757047/96768	✓	✓	✓	✓	✓	✓			**2KJ3436 - ■■■■■ - ■■G1**
12761	0.11	4850	37200	–	0.31	1337757047/104832	✓	✓	✓	✓	✓	✓			**2KJ3436 - ■■■■■ - ■■F1**
11298	0.13	4850	37200	–	0.37	1275535789/112896	✓	✓	✓	✓	✓	✓	✓		**2KJ3436 - ■■■■■ - ■■E1**
9404	0.15	4850	37200	–	0.50	404438177/43008	✓	✓	✓	✓	✓	✓	✓		**2KJ3436 - ■■■■■ - ■■D1**
8851	0.16	4850	37200	–	0.59	23790481/2688	✓	✓	✓	✓	✓	✓	✓		**2KJ3436 - ■■■■■ - ■■C1**
7930	0.18	4850	37200	–	0.65	1151093273/145152	✓	✓	✓	✓	✓	✓	✓		**2KJ3436 - ■■■■■ - ■■B1**
6751	0.21	4850	37200	–	0.85	31110629/4608	✓	✓	✓	✓	✓	✓	✓		**2KJ3436 - ■■■■■ - ■■A1**

Article No. supplement		
Shaft design	**1 or 9**	see page 10/49
Motor frame size, motor type, efficiency class		see chapter 9
Frequency and voltage	**2 or 9**	see page 11/2
Gearbox mounting type	**A, F, H or D**	see page 10/42

[1] Only in conjunction with reduced-backlash version

© Innomotics 2023

Selection and ordering data

i –	n_2 rpm	T_{2N} Nm	F_{R2} N	φ [1] '	J_G 10^{-4} kgm²	R_{ex} –	Motor frame size 63	71	80	90	100	112	132	160	Article No. (Article No. supplement, see below)
FD.149-Z49															
6608	0.22	8000	65000	–	0.18	2590191/392	✓	✓	✓	✓					**2KJ3437 - ■■■■■ - ■■B2**
6007	0.24	8000	65000	–	0.22	12950955/2156	✓	✓	✓	✓					**2KJ3437 - ■■■■■ - ■■A2**
5109	0.28	8000	65000	–	0.28	2002725/392	✓	✓	✓	✓					**2KJ3437 - ■■■■■ - ■■X1**
4545	0.32	8000	65000	–	0.34	10013625/2156	✓	✓	✓	✓					**2KJ3437 - ■■■■■ - ■■W1**
4144	0.35	8000	65000	–	0.39	3248865/784	✓	✓	✓	✓	✓	✓			**2KJ3437 - ■■■■■ - ■■V1**
3716	0.39	8000	65000	–	0.47	2002725/539	✓	✓	✓	✓	✓	✓			**2KJ3437 - ■■■■■ - ■■U1**
3349	0.43	8000	65000	–	0.55	2625795/784	✓	✓	✓	✓	✓	✓			**2KJ3437 - ■■■■■ - ■■T1**
3092	0.47	8000	65000	–	0.66	7877385/2548	✓	✓	✓	✓	✓	✓			**2KJ3437 - ■■■■■ - ■■S1**
2822	0.51	8000	65000	–	0.78	3871935/1372	✓	✓	✓	✓	✓	✓	✓		**2KJ3437 - ■■■■■ - ■■R1**
2342	0.62	8000	65000	–	1.0	7343325/3136	✓	✓	✓	✓	✓	✓	✓		**2KJ3437 - ■■■■■ - ■■Q1**
2204	0.66	8000	65000	–	1.16	7343325/3332	✓	✓	✓	✓	✓	✓	✓		**2KJ3437 - ■■■■■ - ■■P1**
2081	0.70	8000	65000	–	1.31	815925/392	✓	✓	✓	✓	✓	✓	✓		**2KJ3437 - ■■■■■ - ■■N1**
1771	0.82	8000	65000	–	1.62	347139/196	✓	✓	✓	✓	✓	✓	✓		**2KJ3437 - ■■■■■ - ■■M1**
1517	0.96	8000	65000	–	2.0	133515/88			✓	✓	✓	✓	✓		**2KJ3437 - ■■■■■ - ■■L1**
1334	1.1	8000	65000	–	2.5	2091735/1568			✓	✓	✓	✓	✓		**2KJ3437 - ■■■■■ - ■■K1**
1125	1.3	8000	65000	–	3.2	110295/98			✓	✓	✓	✓	✓		**2KJ3437 - ■■■■■ - ■■J1**
981	1.5	8000	65000	–	4.2	240327/245			✓	✓	✓	✓	✓		**2KJ3437 - ■■■■■ - ■■H1**
968	1.5	8000	65000	–	1.81	806058/833	✓	✓	✓	✓	✓	✓	✓		**2KJ3437 - ■■■■■ - ■■G1**
914	1.6	8000	65000	–	2.0	44781/49	✓	✓	✓	✓	✓	✓	✓		**2KJ3437 - ■■■■■ - ■■F1**
778	1.9	8000	65000	–	2.6	952614/1225	✓	✓	✓	✓	✓	✓	✓		**2KJ3437 - ■■■■■ - ■■E1**
666	2.2	8000	65000	–	3.4	36639/55			✓	✓	✓	✓	✓		**2KJ3437 - ■■■■■ - ■■D1**
586	2.5	8000	65000	–	4.3	574011/980			✓	✓	✓	✓	✓		**2KJ3437 - ■■■■■ - ■■C1**
494	2.9	8000	65000	–	5.7	121068/245			✓	✓	✓	✓	✓		**2KJ3437 - ■■■■■ - ■■B1**
431	3.4	8000	65000	–	7.5	2638008/6125			✓	✓	✓	✓	✓		**2KJ3437 - ■■■■■ - ■■A1**
FD.149-D49															
27793	0.05	8000	65000	–	0.08	1361853/49	✓	✓	✓	✓					**2KJ3438 - ■■■■■ - ■■N1**
25266	0.06	8000	65000	–	0.10	13618530/539	✓	✓	✓	✓					**2KJ3438 - ■■■■■ - ■■M1**
21617	0.07	8000	65000	–	0.12	151317/7	✓	✓	✓	✓					**2KJ3438 - ■■■■■ - ■■L1**
19652	0.07	8000	65000	–	0.14	1513170/77	✓	✓	✓	✓					**2KJ3438 - ■■■■■ - ■■K1**
17371	0.08	8000	65000	–	0.17	6809265/392	✓	✓	✓	✓	✓	✓			**2KJ3438 - ■■■■■ - ■■J1**
15791	0.09	8000	65000	–	0.22	34046325/2156	✓	✓	✓	✓	✓	✓			**2KJ3438 - ■■■■■ - ■■H1**
13832	0.10	8000	65000	–	0.26	10844385/784	✓	✓	✓	✓	✓	✓			**2KJ3438 - ■■■■■ - ■■G1**
12768	0.11	8000	65000	–	0.31	32533155/2548	✓	✓	✓	✓	✓	✓			**2KJ3438 - ■■■■■ - ■■F1**
11305	0.13	8000	65000	–	0.37	31019985/2744	✓	✓	✓	✓	✓	✓	✓		**2KJ3438 - ■■■■■ - ■■E1**
9409	0.15	8000	65000	–	0.50	29506815/3136	✓	✓	✓	✓	✓	✓	✓		**2KJ3438 - ■■■■■ - ■■D1**
8856	0.16	8000	65000	–	0.59	1735695/196	✓	✓	✓	✓	✓	✓	✓		**2KJ3438 - ■■■■■ - ■■C1**
7935	0.18	8000	65000	–	0.66	3110405/392	✓	✓	✓	✓	✓	✓	✓		**2KJ3438 - ■■■■■ - ■■B1**
6755	0.21	8000	65000	–	0.86	756585/112	✓	✓	✓	✓	✓	✓	✓		**2KJ3438 - ■■■■■ - ■■A1**

Article No. supplement		
Shaft design	**1 or 9**	see page 10/49
Motor frame size, motor type, efficiency class		see chapter 9
Frequency and voltage	**2 or 9**	see page 11/2
Gearbox mounting type	**A, F, H or D**	see page 10/42

[1] Only in conjunction with reduced-backlash version

© Innomotics 2023

Transmission ratios and torques for very low speeds

Selection and ordering data

i –	n_2 rpm	T_{2N} Nm	F_{R2} N	φ [1] '	J_G 10^{-4} kgm²	R_{ex} –	Motor frame size 63	71	80	90	100	112	132	160	Article No. (Article No. supplement, see below)
FD.169-Z69															
6230	0.23	13600	73500	–	0.21	5189888/833	✓	✓	✓	✓					**2KJ3440 - ■■■■■ - ■■A2**
5664	0.26	13600	73500	–	0.26	4718080/833	✓	✓	✓	✓					**2KJ3440 - ■■■■■ - ■■X1**
4817	0.30	13600	73500	–	0.33	4012800/833	✓	✓	✓	✓					**2KJ3440 - ■■■■■ - ■■W1**
4379	0.33	13600	73500	–	0.40	3648000/833	✓	✓	✓	✓					**2KJ3440 - ■■■■■ - ■■V1**
3907	0.37	13600	73500	–	0.47	9764480/2499	✓	✓	✓	✓	✓	✓			**2KJ3440 - ■■■■■ - ■■U1**
3503	0.41	13600	73500	–	0.57	2918400/833	✓	✓	✓	✓	✓	✓			**2KJ3440 - ■■■■■ - ■■T1**
3158	0.46	13600	73500	–	0.67	7891840/2499	✓	✓	✓	✓	✓	✓			**2KJ3440 - ■■■■■ - ■■S1**
2915	0.50	13600	73500	–	0.80	31567360/10829	✓	✓	✓	✓	✓	✓			**2KJ3440 - ■■■■■ - ■■R1**
2661	0.54	13600	73500	–	0.95	15516160/5831	✓	✓	✓	✓	✓	✓	✓		**2KJ3440 - ■■■■■ - ■■Q1**
2208	0.66	13600	73500	–	1.25	1839200/833	✓	✓	✓	✓	✓	✓	✓		**2KJ3440 - ■■■■■ - ■■P1**
2078	0.70	13600	73500	–	1.44	29427200/14161	✓	✓	✓	✓	✓	✓	✓		**2KJ3440 - ■■■■■ - ■■N1**
1963	0.74	13600	73500	–	1.63	14713600/7497	✓	✓	✓	✓	✓	✓	✓		**2KJ3440 - ■■■■■ - ■■M1**
1670	0.87	13600	73500	–	2.1	1391104/833	✓	✓	✓	✓	✓	✓	✓		**2KJ3440 - ■■■■■ - ■■L1**
1431	1.0	13600	73500	–	2.6	24320/17			✓	✓	✓	✓	✓		**2KJ3440 - ■■■■■ - ■■K1**
1258	1.2	13600	73500	–	3.2	3143360/2499			✓	✓	✓	✓	✓		**2KJ3440 - ■■■■■ - ■■J1**
1061	1.4	13600	73500	–	4.2	20331520/19159			✓	✓	✓	✓	✓		**2KJ3440 - ■■■■■ - ■■H1**
925	1.6	13600	73500	–	5.7	3852288/4165			✓	✓	✓	✓	✓		**2KJ3440 - ■■■■■ - ■■G1**
869	1.7	13600	73500	–	3.2	21401600/24633	✓	✓	✓	✓	✓	✓	✓		**2KJ3440 - ■■■■■ - ■■F1**
739	2.0	13600	73500	–	4.3	2023424/2737	✓	✓	✓	✓	✓	✓	✓		**2KJ3440 - ■■■■■ - ■■E1**
633	2.3	13600	73500	–	5.6	2723840/4301			✓	✓	✓	✓	✓		**2KJ3440 - ■■■■■ - ■■D1**
557	2.6	13600	73500	–	7.1	4572160/8211			✓	✓	✓	✓	✓		**2KJ3440 - ■■■■■ - ■■C1**
470	3.1	13600	73500	–	9.7	29573120/62951			✓	✓	✓	✓	✓		**2KJ3440 - ■■■■■ - ■■B1**
409	3.5	13600	73500	–	13	5603328/13685			✓	✓	✓	✓	✓		**2KJ3440 - ■■■■■ - ■■A1**
FD.169-D69															
29846	0.05	13600	73500	–	0.07	4387328/147	✓	✓	✓	✓					**2KJ3441 - ■■■■■ - ■■P1**
26206	0.06	13600	73500	–	0.08	1284096/49	✓	✓	✓	✓					**2KJ3441 - ■■■■■ - ■■N1**
23824	0.06	13600	73500	–	0.10	1167360/49	✓	✓	✓	✓					**2KJ3441 - ■■■■■ - ■■M1**
20382	0.07	13600	73500	–	0.12	428032/21	✓	✓	✓	✓					**2KJ3441 - ■■■■■ - ■■L1**
18530	0.08	13600	73500	–	0.15	389120/21	✓	✓	✓	✓					**2KJ3441 - ■■■■■ - ■■K1**
16379	0.09	13600	73500	–	0.17	802560/49	✓	✓	✓	✓	✓	✓			**2KJ3441 - ■■■■■ - ■■J1**
14890	0.10	13600	73500	–	0.23	729600/49	✓	✓	✓	✓	✓	✓			**2KJ3441 - ■■■■■ - ■■H1**
13042	0.11	13600	73500	–	0.26	5751680/441	✓	✓	✓	✓	✓	✓			**2KJ3441 - ■■■■■ - ■■G1**
12039	0.12	13600	73500	–	0.32	23006720/1911	✓	✓	✓	✓	✓	✓			**2KJ3441 - ■■■■■ - ■■F1**
10659	0.14	13600	73500	–	0.39	10968320/1029	✓	✓	✓	✓	✓	✓	✓		**2KJ3441 - ■■■■■ - ■■E1**
8872	0.16	13600	73500	–	0.52	434720/49	✓	✓	✓	✓	✓	✓	✓		**2KJ3441 - ■■■■■ - ■■D1**
8350	0.17	13600	73500	–	0.61	6955520/833	✓	✓	✓	✓	✓	✓	✓		**2KJ3441 - ■■■■■ - ■■C1**
7482	0.19	13600	73500	–	0.68	9898240/1323	✓	✓	✓	✓	✓	✓	✓		**2KJ3441 - ■■■■■ - ■■B1**
6370	0.23	13600	73500	–	0.89	133760/21	✓	✓	✓	✓	✓	✓	✓		**2KJ3441 - ■■■■■ - ■■A1**

Article No. supplement		
Shaft design	**1 or 9**	see page 10/49
Motor frame size, motor type, efficiency class		see chapter 9
Frequency and voltage	**2 or 9**	see page 11/2
Gearbox mounting type	**A, F, H or D**	see page 10/42

[1] Only in conjunction with reduced-backlash version

© Innomotics 2023

Selection and ordering data

i –	n_2 rpm	T_{2N} Nm	F_{R2} N	φ [1] '	J_G 10^{-4} kgm²	R_{ex} –	Motor frame size 63	71	80	90	100	112	132	160	Article No. (Article No. supplement, see below)
FD.189-Z69															
7150	0.20	19000	110900	–	0.23	191447542/26775	✓	✓	✓	✓					**2KJ3442 - ■■■■■ - ■■C2**
6500	0.22	19000	110900	–	0.28	34808644/5355	✓	✓	✓	✓					**2KJ3442 - ■■■■■ - ■■B2**
5529	0.26	19000	110900	–	0.35	1973686/357	✓	✓	✓	✓					**2KJ3442 - ■■■■■ - ■■A2**
5026	0.29	19000	110900	–	0.43	1794260/357	✓	✓	✓	✓					**2KJ3442 - ■■■■■ - ■■X1**
4484	0.32	19000	110900	–	0.51	72039539/16065	✓	✓	✓	✓	✓	✓			**2KJ3442 - ■■■■■ - ■■W1**
4021	0.36	19000	110900	–	0.62	1435408/357	✓	✓	✓	✓	✓	✓			**2KJ3442 - ■■■■■ - ■■V1**
3624	0.40	19000	110900	–	0.73	58223737/16065	✓	✓	✓	✓	✓	✓			**2KJ3442 - ■■■■■ - ■■U1**
3345	0.43	19000	110900	–	0.87	17914996/5355	✓	✓	✓	✓	✓	✓			**2KJ3442 - ■■■■■ - ■■T1**
3054	0.47	19000	110900	–	1.04	114473788/37485	✓	✓	✓	✓	✓	✓	✓		**2KJ3442 - ■■■■■ - ■■S1**
2534	0.57	19000	110900	–	1.38	10855273/4284	✓	✓	✓	✓	✓	✓	✓		**2KJ3442 - ■■■■■ - ■■R1**
2385	0.61	19000	110900	–	1.57	43421092/18207	✓	✓	✓	✓	✓	✓	✓		**2KJ3442 - ■■■■■ - ■■Q1**
2252	0.64	19000	110900	–	1.78	21710546/9639	✓	✓	✓	✓	✓	✓	✓		**2KJ3442 - ■■■■■ - ■■P1**
1917	0.76	19000	110900	–	2.3	51315836/26775	✓	✓	✓	✓	✓	✓	✓		**2KJ3442 - ■■■■■ - ■■N1**
1642	0.88	19000	110900	–	2.9	1255982/765			✓	✓	✓	✓	✓		**2KJ3442 - ■■■■■ - ■■M1**
1444	1.0	19000	110900	–	3.6	46381621/32130			✓	✓	✓	✓	✓		**2KJ3442 - ■■■■■ - ■■L1**
1218	1.2	19000	110900	–	4.8	150000136/123165			✓	✓	✓	✓	✓		**2KJ3442 - ■■■■■ - ■■K1**
1061	1.4	19000	110900	–	6.4	15789488/14875			✓	✓	✓	✓	✓		**2KJ3442 - ■■■■■ - ■■J1**
997	1.5	19000	110900	–	4.0	31578976/31671	✓	✓	✓	✓	✓	✓	✓		**2KJ3442 - ■■■■■ - ■■H1**
848	1.7	19000	110900	–	5.4	74641216/87975	✓	✓	✓	✓	✓	✓	✓		**2KJ3442 - ■■■■■ - ■■G1**
727	2.0	19000	110900	–	7.1	140669984/193545			✓	✓	✓	✓	✓		**2KJ3442 - ■■■■■ - ■■F1**
639	2.3	19000	110900	–	9.1	33732088/52785			✓	✓	✓	✓	✓		**2KJ3442 - ■■■■■ - ■■E1**
539	2.7	19000	110900	–	12	218182016/404685			✓	✓	✓	✓	✓		**2KJ3442 - ■■■■■ - ■■D1**
478	3.0	19000	110900	–	12	8403976/17595			✓	✓	✓	✓	✓		**2KJ3442 - ■■■■■ - ■■C1**
403	3.6	19000	110900	–	16	54357632/134895			✓	✓	✓	✓	✓		**2KJ3442 - ■■■■■ - ■■B1**
351	4.1	19000	110900	–	21	17165568/48875			✓	✓	✓	✓	✓		**2KJ3442 - ■■■■■ - ■■A1**
FD.189-D69															
27341	0.05	19000	110900	–	0.10	2870816/105	✓	✓	✓	✓					**2KJ3443 - ■■■■■ - ■■M1**
23392	0.06	19000	110900	–	0.12	15789488/675	✓	✓	✓	✓					**2KJ3443 - ■■■■■ - ■■L1**
21265	0.07	19000	110900	–	0.15	2870816/135	✓	✓	✓	✓					**2KJ3443 - ■■■■■ - ■■K1**
18797	0.08	19000	110900	–	0.17	1973686/105	✓	✓	✓	✓	✓	✓			**2KJ3443 - ■■■■■ - ■■J1**
17088	0.08	19000	110900	–	0.23	358852/21	✓	✓	✓	✓	✓	✓			**2KJ3443 - ■■■■■ - ■■H1**
14968	0.10	19000	110900	–	0.27	42434249/2835	✓	✓	✓	✓	✓	✓			**2KJ3443 - ■■■■■ - ■■G1**
13817	0.10	19000	110900	–	0.32	13056692/945	✓	✓	✓	✓	✓	✓			**2KJ3443 - ■■■■■ - ■■F1**
12233	0.12	19000	110900	–	0.39	80921126/6615	✓	✓	✓	✓	✓	✓	✓		**2KJ3443 - ■■■■■ - ■■E1**
10182	0.14	19000	110900	–	0.53	12828959/1260	✓	✓	✓	✓	✓	✓	✓		**2KJ3443 - ■■■■■ - ■■D1**
9583	0.15	19000	110900	–	0.62	51315836/5355	✓	✓	✓	✓	✓	✓	✓		**2KJ3443 - ■■■■■ - ■■C1**
8586	0.17	19000	110900	–	0.69	73026382/8505	✓	✓	✓	✓	✓	✓	✓		**2KJ3443 - ■■■■■ - ■■B1**
7310	0.20	19000	110900	–	0.90	986843/135	✓	✓	✓	✓	✓	✓	✓		**2KJ3443 - ■■■■■ - ■■A1**

Article No. supplement		
Shaft design	**1 or 9**	see page 10/49
Motor frame size, motor type, efficiency class		see chapter 9
Frequency and voltage	**2 or 9**	see page 11/2
Gearbox mounting type	**A, F, H or D**	see page 10/42

[1] Only in conjunction with reduced-backlash version

© Innomotics 2023

Dimensional drawings

Overview

Information about dimensional drawings can be found in chapter Introduction on page 1/24.

Design	Frame size	Dimensional drawing on page
Parallel shaft geared motor FZ and FD		
Shaft-mounted design		
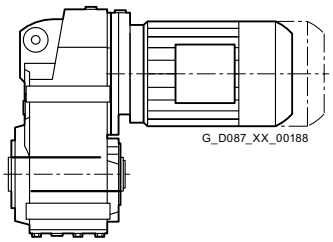	FZAD./FDAD.29	4/70
	FZAD./FDAD.39	4/74
	FZAD./FDAD.49	4/78
	FZAD./FDAD.69	4/82
	FZAD./FDAD.79	4/86
	FZAD./FDAD.89	4/90
	FZAD./FDAD.109	4/95
	FZAD./FDAD.129	4/100
	FZAD./FDAD.149	4/105
	FZAD./FDAD.169	4/110
	FZAD./FDAD.189	4/115
Housing flange design		
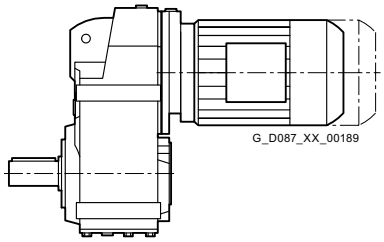	FZ.Z./FD.Z.29	4/71
	FZ.Z./FD.Z.39	4/75
	FZ.Z./FD.Z.49	4/79
	FZ.Z./FD.Z.69	4/83
	FZ.Z./FD.Z.79	4/87
	FZ.Z./FD.Z.89	4/91
	FZ.Z./FD.Z.109	4/96
	FZ.Z./FD.Z.129	4/101
	FZ.Z./FD.Z.149	4/106
	FZ.Z./FD.Z.169	4/111
	FZ.Z./FD.Z.189	4/116
Flange-mounted design		
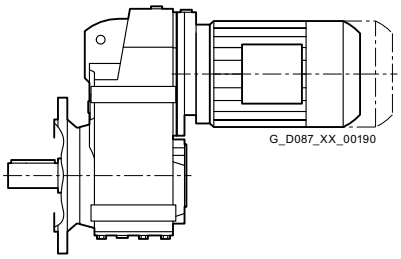	FZ.F./FD.F.29	4/72
	FZ.F./FD.F.39	4/76
	FZ.F./FD.F.49	4/80
	FZ.F./FD.F.69	4/84
	FZ.F./FD.F.79	4/88
	FZ.F./FD.F.89	4/92
	FZ.F./FD.F.109	4/97
	FZ.F./FD.F.129	4/102
	FZ.F./FD.F.149	4/107
	FZ.F./FD.F.169	4/112
	FZ.F./FD.F.189	4/117
Flange-mounted design with VLplus reinforced bearing system		
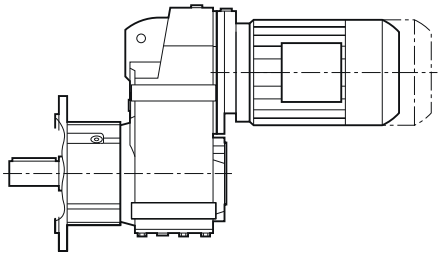	FZ.F./FD.F.89	4/93
	FZ.F./FD.F.109	4/98
	FZ.F./FD.F.129	4/103
	FZ.F./FD.F.149	4/108
	FZ.F./FD.F.169	4/113

© Innomotics 2023

Overview

Design	Frame size	Dimensional drawing on page
Parallel shaft geared motor FZ and FD		
Foot-mounted design		
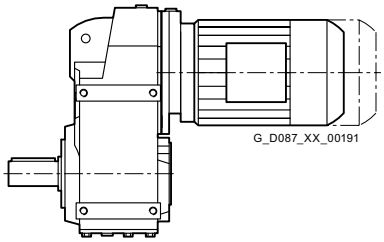	FZ../FD..29	4/73
	FZ../FD..39	4/77
	FZ../FD..49	4/81
	FZ../FD..69	4/85
	FZ../FD..79	4/89
	FZ../FD..89	4/94
	FZ../FD..109	4/99
	FZ../FD..129	4/104
	FZ../FD..149	4/109
	FZ../FD..169	4/114
	FZ../FD..189	4/118
Parallel shaft tandem geared motor		
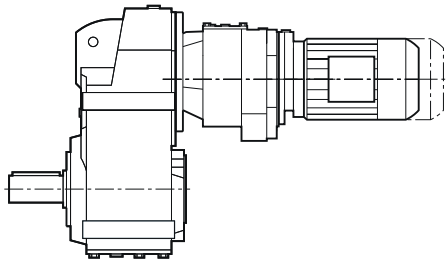	FZ../FD..29-Z/D19 ... FD..189-Z/D69	4/119 ... 4/120
Additional versions and options		
SIMOLOC assembly system		
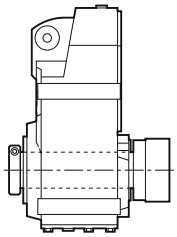	FZADR/FDADR29 ... FZADR/FDADR89	4/121
Protective covers		
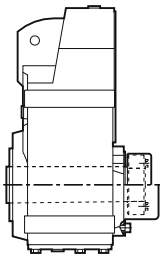	FZ../FD..29 ... FZ../FD..189	4/122 ... 4/123
Inner contour of the flange-mounted design		
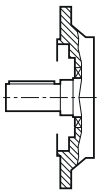	FZF/FDF.29 ... FZF/FDF.189 FZAF/FDAF.29 ... FZAF/FDAF.189	4/124

© Innomotics 2023

Gearbox FZAD./FDAD.29 in a shaft-mounted design

FAD030, FADS030

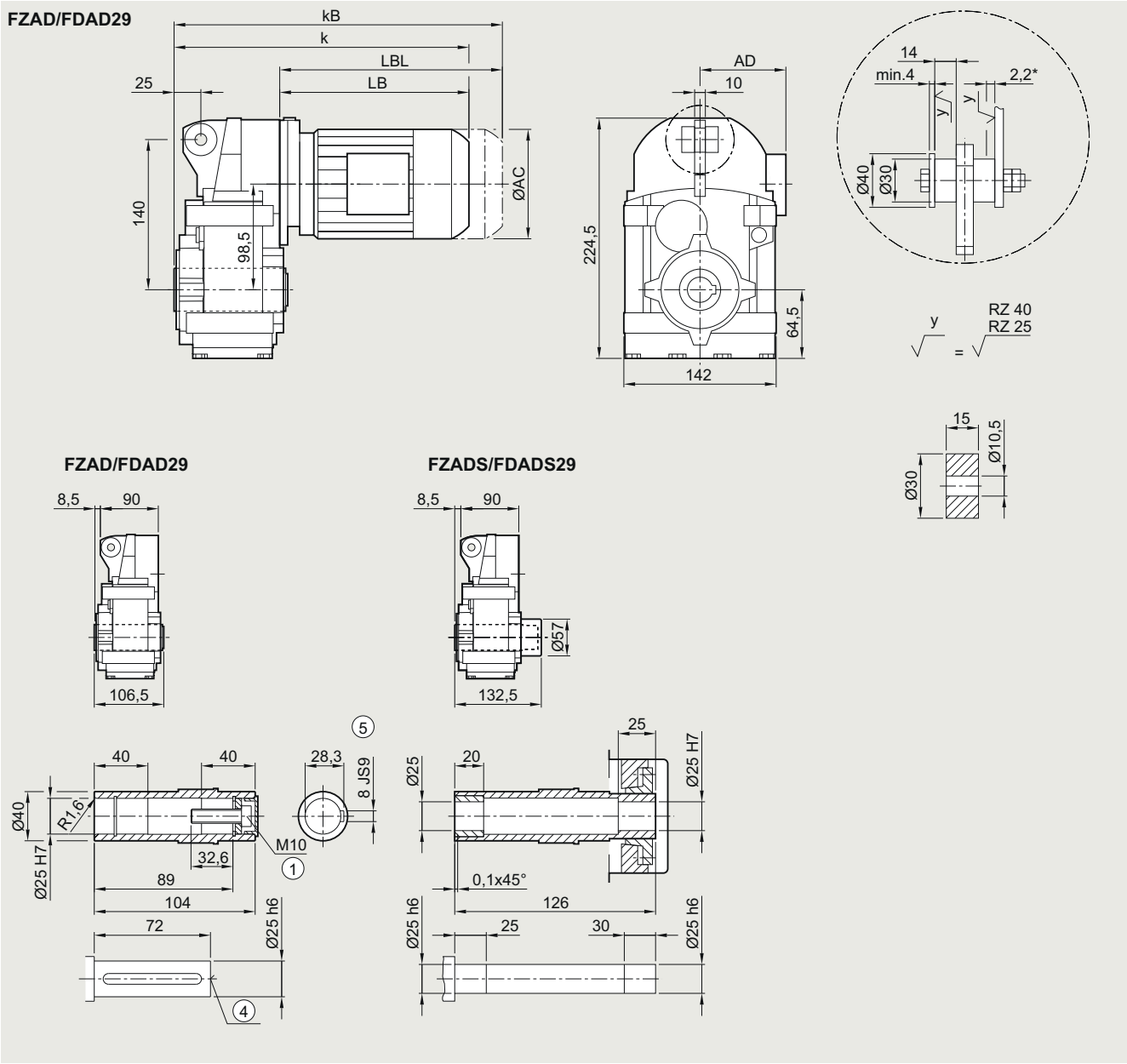

Motor	LE 63	63Z	71	71Z	71Y	80	80Z	90[2]	90Z[2]	100[2]	100Z[2]
AC	117.8	117.8	138.8	138.8	138.8	156.3	156.3	173.8	173.8	198.0	198.0
AD[1]	124.0	124.0	134.0	134.0	134.0	149.2	149.2	154.2	154.2	170.5	170.5
k	292.5	318.5	324.5	343.5	383.5	388.5	423.5	450.0	490.0	506.5	541.5
kB	337.0	363.0	379.5	398.5	438.5	448.5	483.5	520.0	560.0	585.0	620.0
LB	194.0	220.0	226.0	245.0	285.0	290.0	325.0	351.5	391.5	408.0	443.0
LBL	238.5	264.5	281.0	300.0	340.0	350.0	385.0	421.5	461.5	486.5	521.5

① ISO 4017 ④ DIN 332 ⑤ Feather key/keyway DIN 6885-1 * Spring compression at max. torque
[1] AD depends on the motor options, for other dimensions, see page 9/46. [2] FDADS/FZADS not possible

© Innomotics 2023

Gearbox FZ.Z./FD.Z.29 in a housing flange design

FZ030, FAZ030, FAZS030

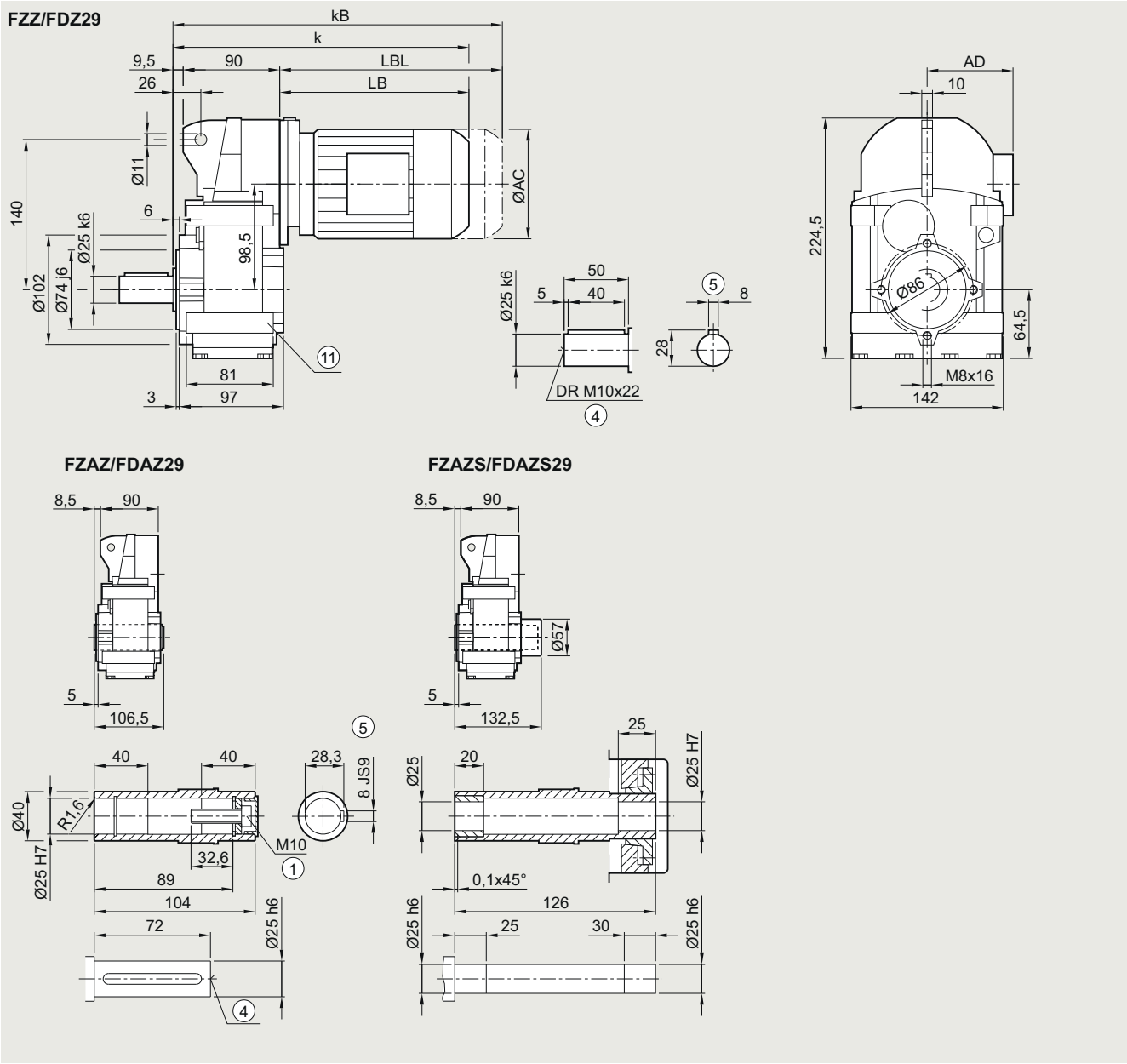

Motor	LE 63	63Z	71	71Z	71Y	80	80Z	90[2]	90Z[2]	100[2]	100Z[2]
AC	117.8	117.8	138.8	138.8	138.8	156.3	156.3	173.8	173.8	198.0	198.0
AD[1]	124.0	124.0	134.0	134.0	134.0	149.2	149.2	154.2	154.2	170.5	170.5
k	293.5	319.5	325.5	344.5	384.5	389.5	424.5	451.0	491.0	507.5	542.5
kB	338.0	364.0	380.5	399.5	439.5	449.5	484.5	521.0	561.0	586.0	621.0
LB	194.0	220.0	226.0	245.0	285.0	290.0	325.0	351.5	391.5	408.0	443.0
LBL	238.5	264.5	281.0	300.0	340.0	350.0	385.0	421.5	461.5	486.5	521.5

① ISO 4017 ④ DIN 332 ⑤ Feather key/keyway DIN 6885-1 ⑪ Use bores only for foot-mounted design

1) AD depends on the motor options, for other dimensions, see page 9/46. 2) FDADS/FZADS not possible

© Innomotics 2023

Gearbox FZ.F./FD.F.29 in a flange-mounted design

FF030, FAF030, FAFS030

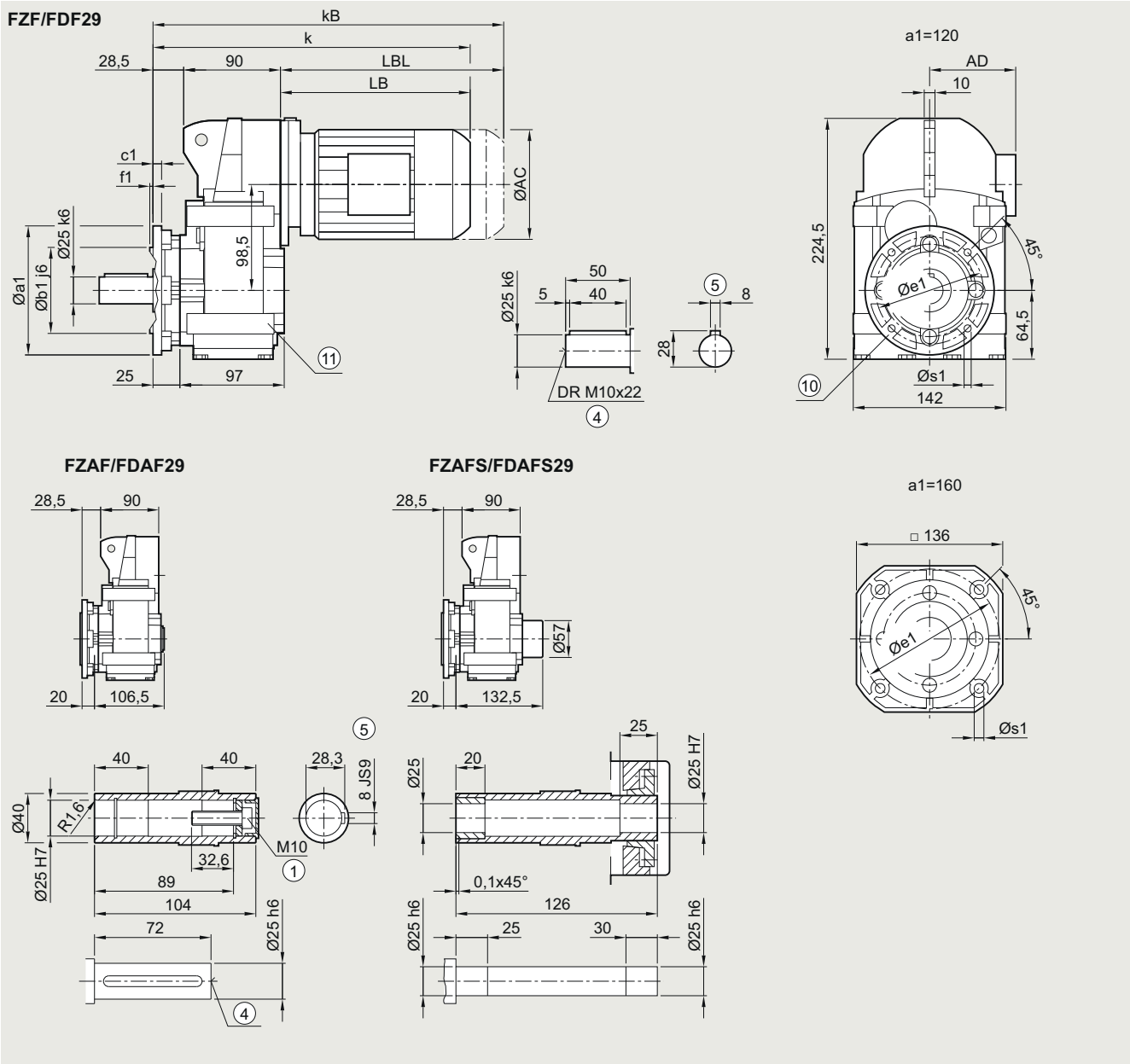

Flange	a1	b1	c1	f1	e1	s1
	120	80	8	3.0	100	6.6
	160	110	9	3.5	130	9.0

Motor	LE 63	63Z	71	71Z	71Y	80	80Z	90[2)]	90Z[2)]	100[2)]	100Z[2)]
AC	117.8	117.8	138.8	138.8	138.8	156.3	156.3	173.8	173.8	198.0	198.0
AD[1)]	124.0	124.0	134.0	134.0	134.0	149.2	149.2	154.2	154.2	170.5	170.5
k	312.5	338.5	344.5	363.5	403.5	408.5	443.5	470.0	510.0	526.5	561.5
kB	357.0	383.0	399.5	418.5	458.5	468.5	503.5	540.0	580.0	605.0	640.0
LB	194.0	220.0	226.0	245.0	285.0	290.0	325.0	351.5	391.5	408.0	443.0
LBL	238.5	264.5	281.0	300.0	340.0	350.0	385.0	421.5	461.5	486.5	521.5

① ISO 4017 ④ DIN 332 ⑤ Feather key/keyway DIN 6885-1 ⑩ For inner contour, see page 4/124
1) AD depends on the motor options, for other dimensions, see page 9/46. 2) FDADS/FZADS not possible ⑪ Use bores only for foot-mounted design

© Innomotics 2023

Gearbox FZ../FD..29 in a foot-mounted design

F030, FA030, FAS030

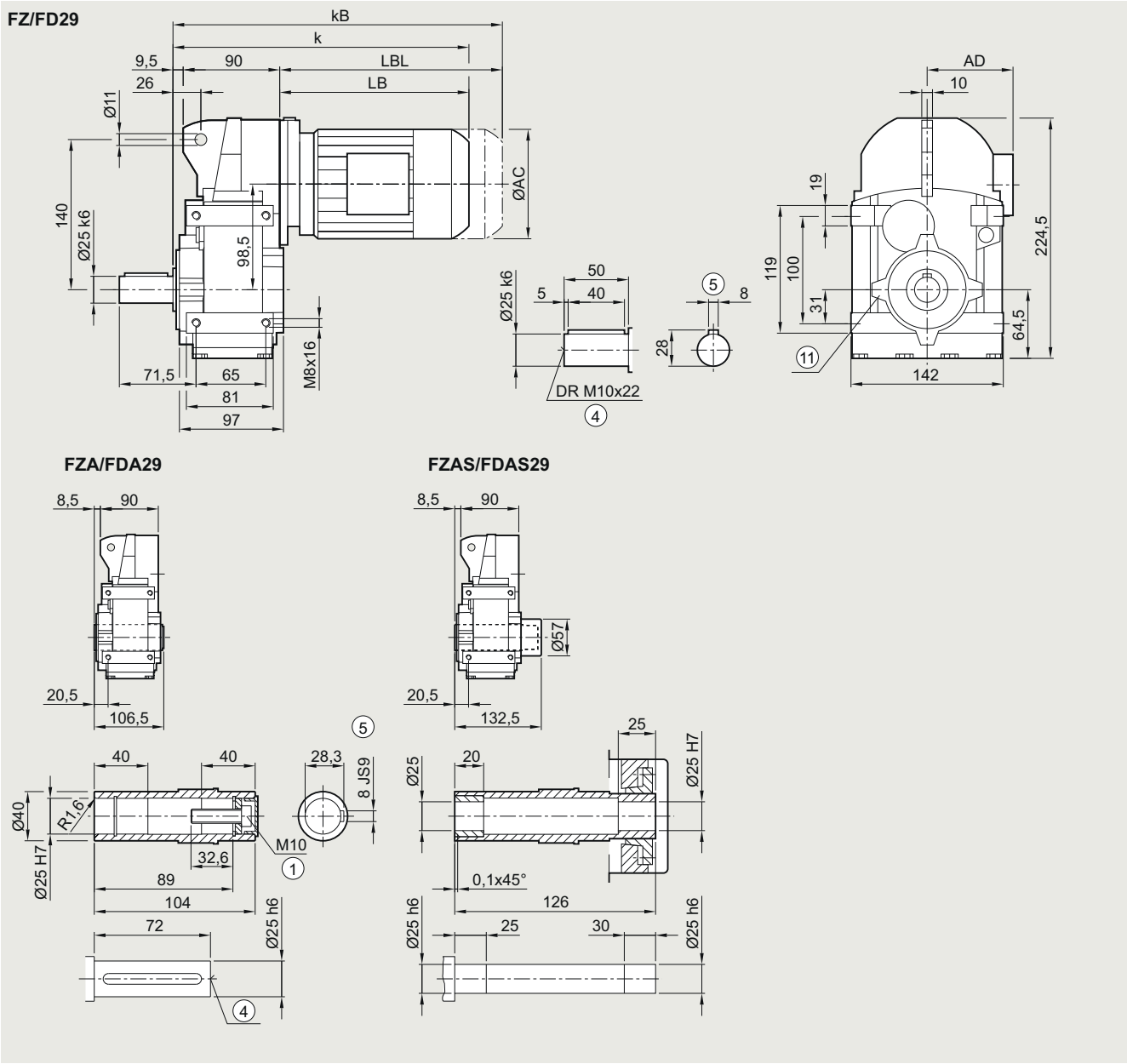

Motor	LE 63	63Z	71	71Z	71Y	80	80Z	90[2)]	90Z[2)]	100[2)]	100Z[2)]
AC	117.8	117.8	138.8	138.8	138.8	156.3	156.3	173.8	173.8	198.0	198.0
AD[1)]	124.0	124.0	134.0	134.0	134.0	149.2	149.2	154.2	154.2	170.5	170.5
k	293.5	319.5	325.5	344.5	384.5	389.5	424.5	451.0	491.0	507.5	542.5
kB	338.0	364.0	380.5	399.5	439.5	449.5	484.5	521.0	561.0	586.0	621.0
LB	194.0	220.0	226.0	245.0	285.0	290.0	325.0	351.5	391.5	408.0	443.0
LBL	238.5	264.5	281.0	300.0	340.0	350.0	385.0	421.5	461.5	486.5	521.5

① ISO 4017 ④ DIN 332 ⑤ Feather key/keyway DIN 6885-1 ⑪ Use bores only for housing flange design

1) AD depends on the motor options, for other dimensions, see page 9/46.

2) FDADS/FZADS not possible

© Innomotics 2023

Gearbox FZAD./FDAD.39 in a shaft-mounted design

FAD030, FADS030, FADT030

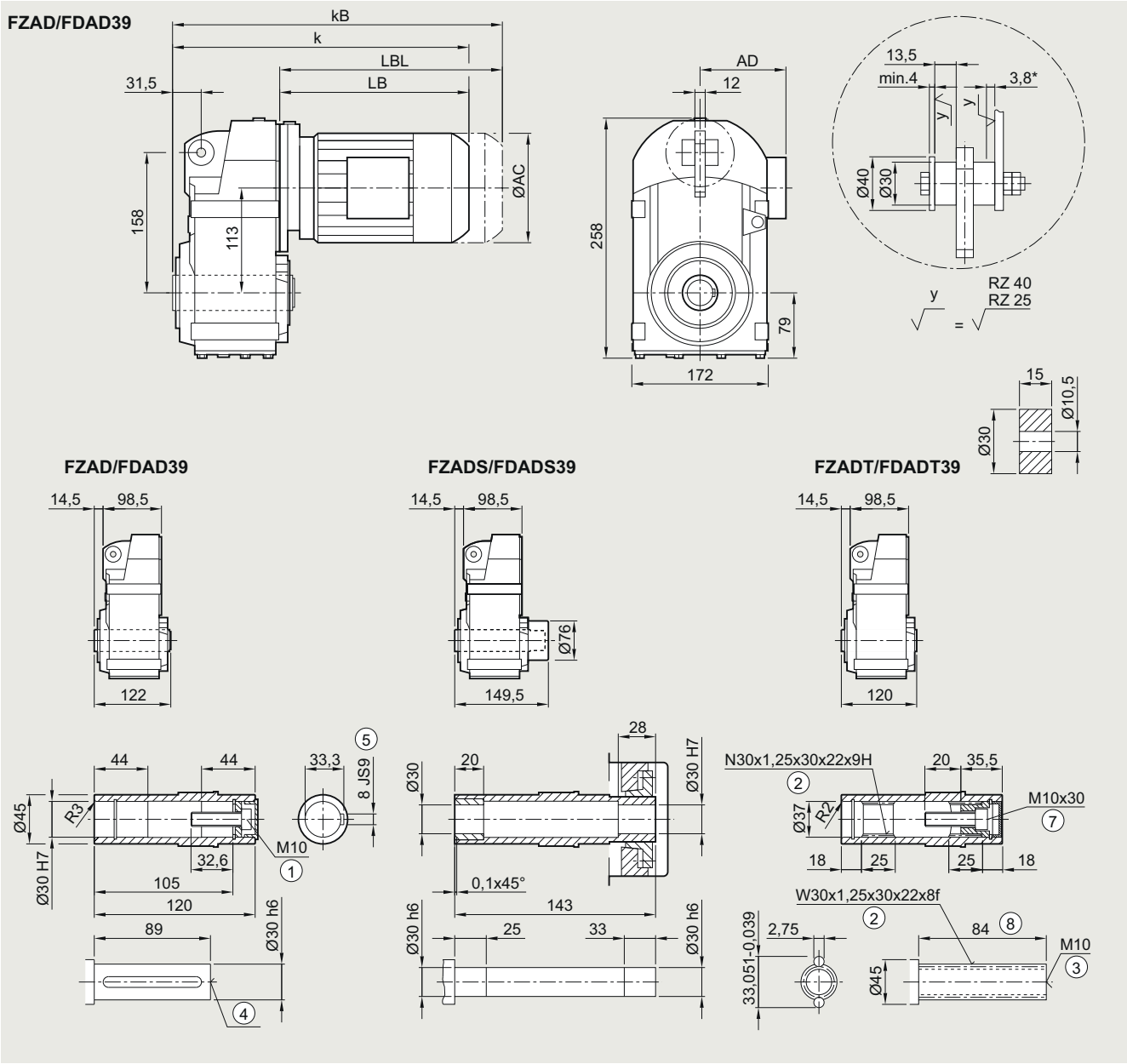

Motor	LE 63	63Z	71	71Z	71Y	80	80Z	90S	90Z	100[2]	100Z[2]	112[2]	112Z[2]
AC	117.8	117.8	138.8	138.8	138.8	156.3	156.3	173.8	173.8	198.0	198.0	222.0	222.0
AD[1]	124.0	124.0	134.0	134.0	134.0	149.2	149.2	154.2	154.2	170.5	170.5	181.5	181.5
k	307.0	333.0	339.0	358.0	398.0	403.0	438.0	464.5	504.5	521.0	556.0	531.0	556.0
kB	351.5	377.5	394.0	413.0	453.0	463.0	498.0	534.5	574.5	599.5	634.5	604.0	629.0
LB	194.0	220.0	226.0	245.0	285.0	290.0	325.0	351.5	391.5	408.0	443.0	418.0	443.0
LBL	238.5	264.5	281.0	300.0	340.0	350.0	385.0	421.5	461.5	486.5	521.5	491.0	516.0

① ISO 4014 ② DIN 5480 ③ DIN 332-D ④ DIN 332 ⑤ Feather key/keyway DIN 6885-1 ⑦ ISO 4762 ⑧ Without locating shoulder +1 mm
[1] AD depends on the motor options, for other dimensions, see page 9/46. [2] FDADS/FZADS not possible * Spring compression at max. torque

© Innomotics 2023

Gearbox FZ.Z./FD.Z.39 in a housing flange design

FZ030, FAZ030, FAZS030, FAZT030

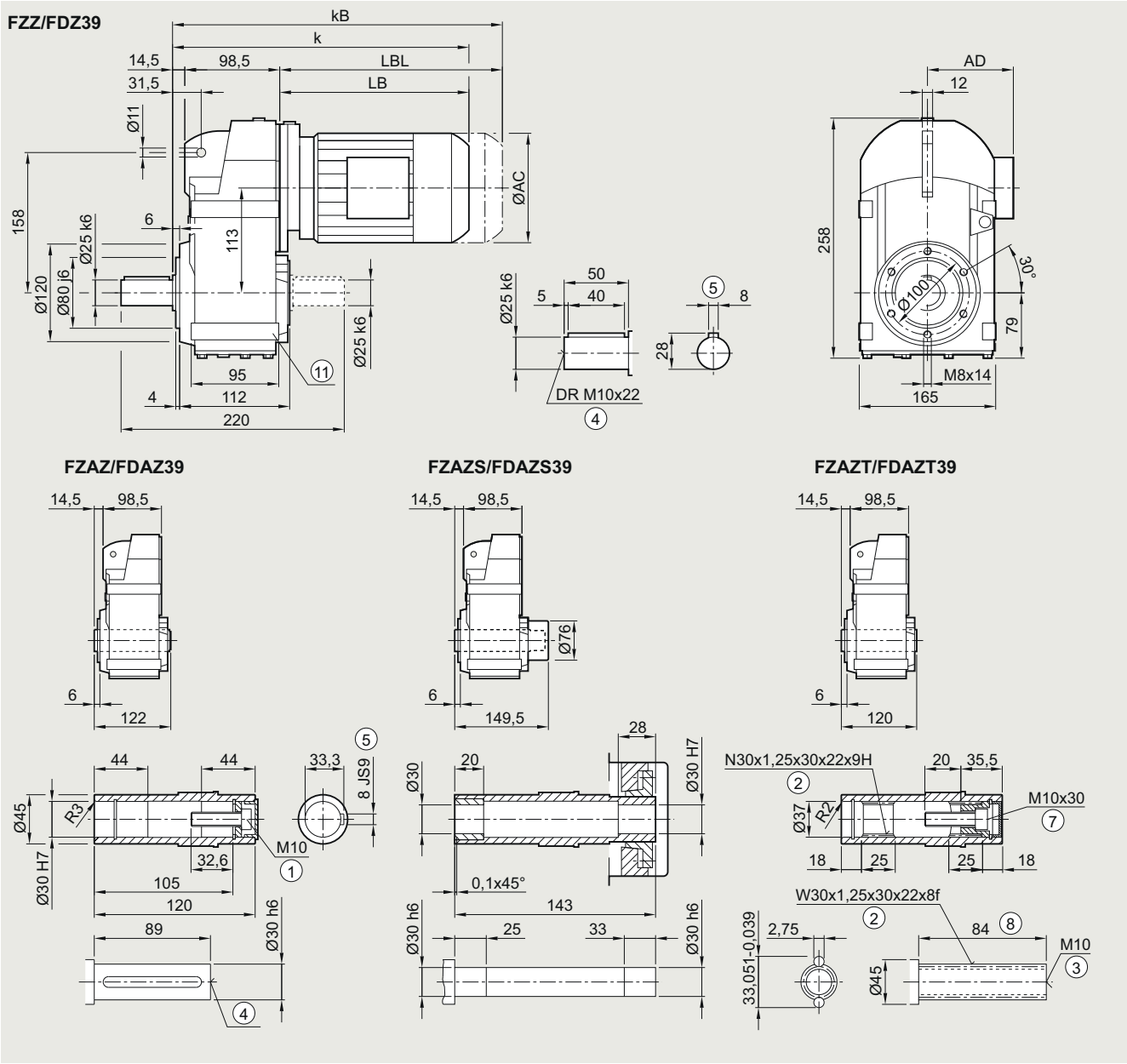

Motor	LE 63	63Z	71	71Z	71Y	80	80Z	90	90Z	100[2]	100Z[2]	112[2]	112Z[2]
AC	117.8	117.8	138.8	138.8	138.8	156.3	156.3	173.8	173.8	198.0	198.0	222.0	222.0
AD[1]	124.0	124.0	134.0	134.0	134.0	149.2	149.2	154.2	154.2	170.5	170.5	181.5	181.5
k	307.0	333.0	339.0	358.0	398.0	403.0	438.0	464.5	504.5	521.0	556.0	531.0	556.0
kB	351.5	377.5	394.0	413.0	453.0	463.0	498.0	534.5	574.5	599.5	634.5	604.0	629.0
LB	194.0	220.0	226.0	245.0	285.0	290.0	325.0	351.5	391.5	408.0	443.0	418.0	443.0
LBL	238.5	264.5	281.0	300.0	340.0	350.0	385.0	421.5	461.5	486.5	521.5	491.0	516.0

① ISO 4014 ② DIN 5480 ③ DIN 332-D ④ DIN 332 ⑤ Feather key/keyway DIN 6885-1 ⑦ ISO 4762 ⑧ Without locating shoulder +1 mm
⑪ Use bores only for foot-mounted design
1) AD depends on the motor options, for other dimensions, see page 9/46.]
2) FDADS/FZADS not possible

© Innomotics 2023

4

Gearbox FZ.F./FD.F.39 in a flange-mounted design

FF030, FAF030, FAFS030, FAFT030

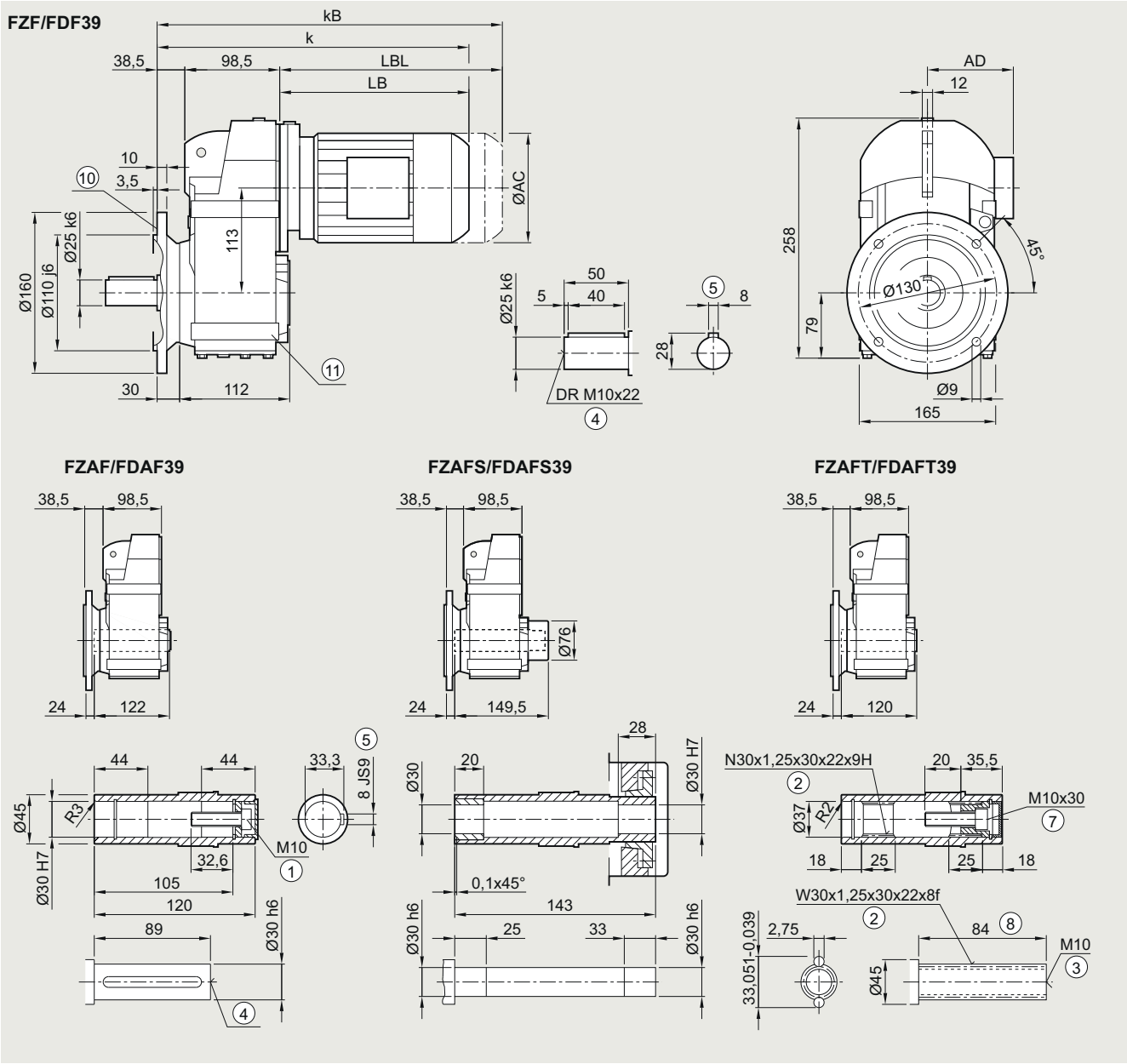

Motor	LE 63	63Z	71	71Z	71Y	80	80Z	90	90Z	100[2]	100Z[2]	112[2]	112Z[2]
AC	117.8	117.8	138.8	138.8	138.8	156.3	156.3	173.8	173.8	198.0	198.0	222.0	222.0
AD[1]	124.0	124.0	134.0	134.0	134.0	149.2	149.2	154.2	154.2	170.5	170.5	181.5	181.5
k	331.0	357.0	363.0	382.0	422.0	427.0	462.0	488.5	528.5	545.0	580.0	555.0	580.0
kB	375.5	401.5	418.0	437.0	477.0	487.0	522.0	558.5	598.5	623.5	658.5	628.0	653.0
LB	194.0	220.0	226.0	245.0	285.0	290.0	325.0	351.5	391.5	408.0	443.0	418.0	443.0
LBL	238.5	264.5	281.0	300.0	340.0	350.0	385.0	421.5	461.5	486.5	521.5	491.0	516.0

① ISO 4014 ② DIN 5480 ③ DIN 332-D ④ DIN 332 ⑤ Feather key/keyway DIN 6885-1 ⑦ ISO 4762 ⑧ Without locating shoulder +1 mm
⑩ For inner contour, see page 4/124 ⑪ Use bores only for foot-mounted design
[1] AD depends on the motor options, for other dimensions, see page 9/46. [2] FADAFS/FZAFS not possible

© Innomotics 2023

Gearbox FZ../FD..39 in a foot-mounted design

F030, FA030, FAS030, FAT030

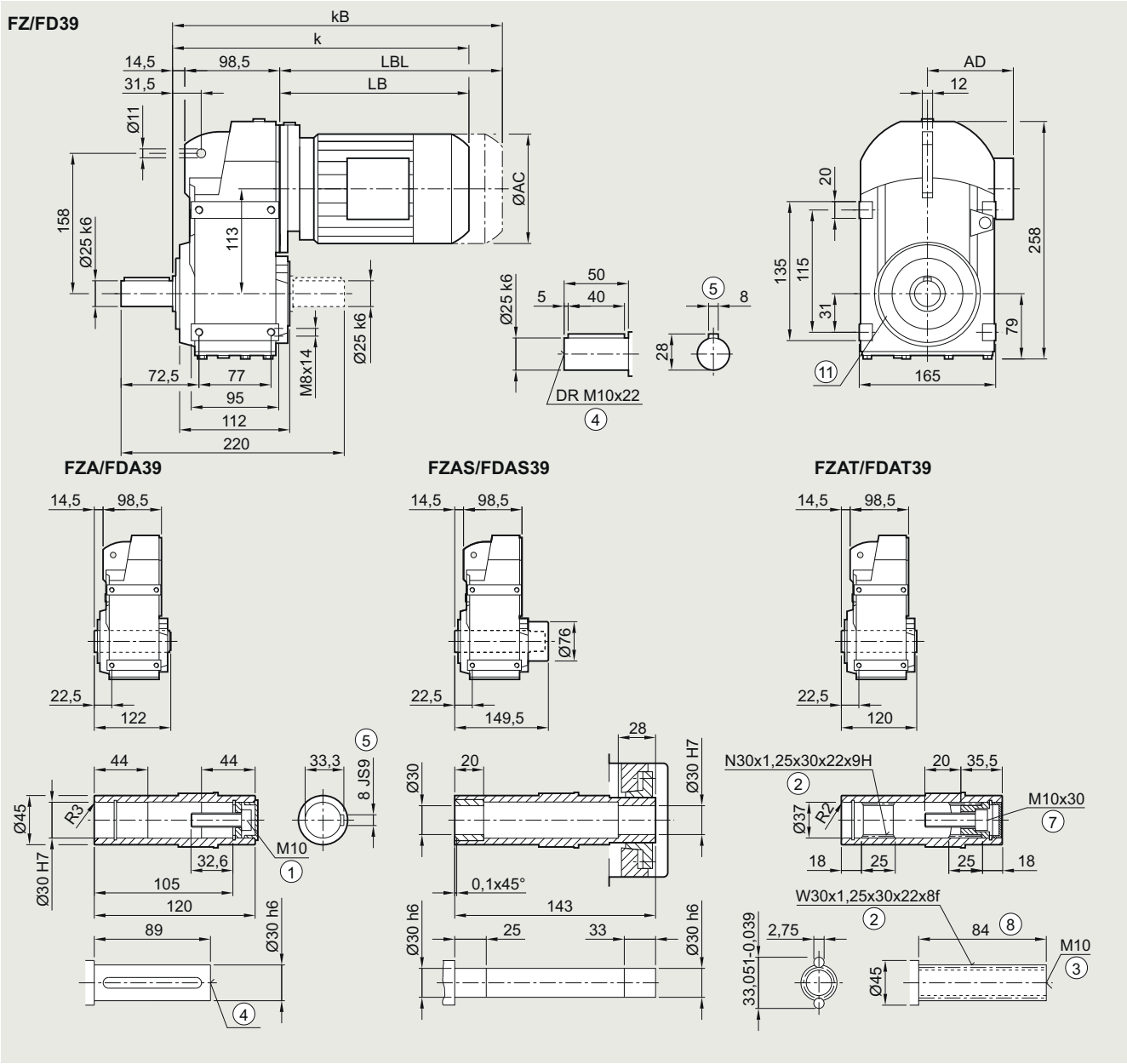

Motor	LE 63	63Z	71	71Z	71Y	80	80Z	90	90Z	100[2]	100Z[2]	112[2]	112Z[2]
AC	117.8	117.8	138.8	138.8	138.8	156.3	156.3	173.8	173.8	198.0	198.0	222.0	222.0
AD[1]	124.0	124.0	134.0	134.0	134.0	149.2	149.2	154.2	154.2	170.5	170.5	181.5	181.5
k	307.0	333.0	339.0	358.0	398.0	403.0	438.0	464.5	504.5	521.0	556.0	531.0	556.0
kB	351.5	377.5	394.0	413.0	453.0	463.0	498.0	534.5	574.5	599.5	634.5	604.0	629.0
LB	194.0	220.0	226.0	245.0	285.0	290.0	325.0	351.5	391.5	408.0	443.0	418.0	443.0
LBL	238.5	264.5	281.0	300.0	340.0	350.0	385.0	421.5	461.5	486.5	521.5	491.0	516.0

① ISO 4014 ② DIN 5480 ③ DIN 332-D ④ DIN 332 ⑤ Feather key/keyway DIN 6885-1 ⑦ ISO 4762 ⑧ Without locating shoulder +1 mm
⑪ Use bores only for housing flange design
1) AD depends on the motor options, for other dimensions, see page 9/46.]
2) FDAS/FZAS not possible

© Innomotics 2023

4

Gearbox FZAD./FDAD.49 in a shaft-mounted design

FAD030, FADS030, FADT030

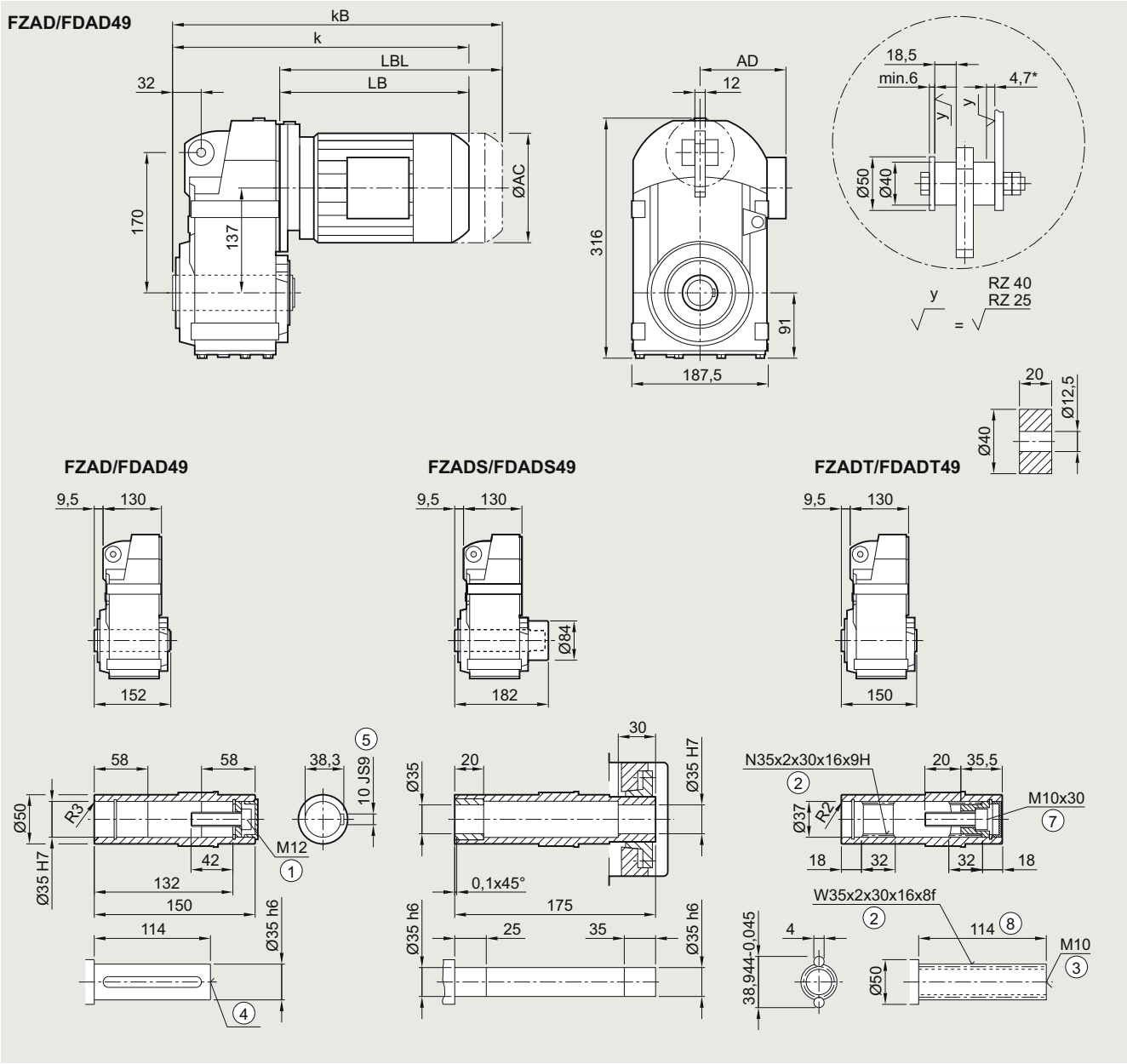

Motor	LE 63	63Z	71	71Z	71Y	80	80Z	90	90Z	100	100Z	112[2]	112Z[2]	132[2]	132Z[2]
AC	117.8	117.8	138.8	138.8	138.8	156.3	156.3	173.8	173.8	198.0	198.0	222.0	222.0	264.0	264.0
AD[1]	124.0	124.0	134.0	134.0	134.0	149.2	149.2	154.2	154.2	170.5	170.5	181.5	181.5	207.0	207.0
k	324.0	350.0	356.0	375.0	415.0	420.0	455.0	481.5	521.5	538.0	573.0	548.0	582.5	601.0	651.0
kB	368.5	394.5	411.0	430.0	470.0	480.0	515.0	551.5	591.5	616.5	651.5	621.0	655.5	705.5	755.5
LB	184.5	210.5	216.5	235.5	275.5	280.5	315.5	342.0	382.0	398.5	433.5	408.5	443.0	461.5	511.5
LBL	229.0	255.0	271.5	290.5	430.5	340.5	375.5	412.0	452.0	477.0	512.0	481.5	516.0	566.0	616.0

① ISO 4014 ② DIN 5480 ③ DIN 332-D ④ DIN 332 ⑤ Feather key/keyway DIN 6885-1 ⑦ ISO 4762 ⑧ Without locating shoulder +1 mm
[1] AD depends on the motor options, for other dimensions, see page 9/46. [2] FDADS/FZADS not possible * Spring compression at max. torque

© Innomotics 2023

Gearbox FZ.Z./FD.Z.49 in a housing flange design

FZ030, FAZ030, FAZS030, FAZT030

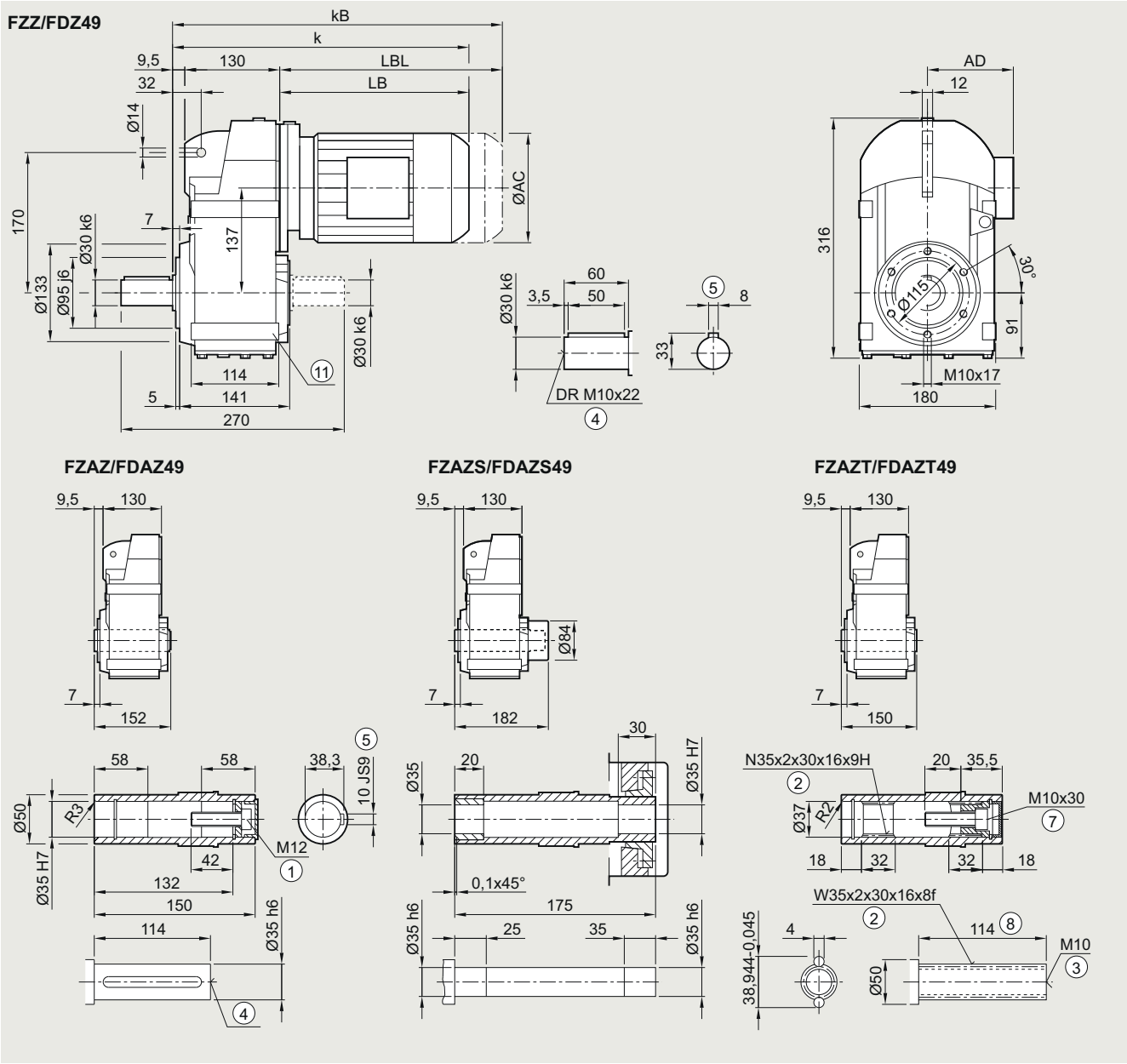

Motor	LE 63	63Z	71	71Z	71Y	80	80Z	90	90Z	100	100Z	112[2)]	112Z[2)]	132[2)]	132Z[2)]
AC	117.8	117.8	138.8	138.8	138.8	156.3	156.3	173.8	173.8	198.0	198.0	222.0	222.0	264.0	264.0
AD[1)]	124.0	124.0	134.0	134.0	134.0	149.2	149.2	154.2	154.2	170.5	170.5	181.5	181.5	207.0	207.0
k	324.0	350.0	356.0	375.0	415.0	420.0	455.0	481.5	521.5	538.0	573.0	548.0	582.5	601.0	651.0
kB	368.5	394.5	411.0	430.0	470.0	480.0	515.0	551.5	591.5	616.5	651.5	621.0	655.5	705.5	755.5
LB	184.5	210.5	216.5	235.5	275.5	280.5	315.5	342.0	382.0	398.5	433.5	408.5	443.0	461.5	511.5
LBL	229.0	255.0	271.5	290.5	430.5	340.5	375.5	412.0	452.0	477.0	512.0	481.5	516.0	566.0	616.0

① ISO 4014 ② DIN 5480 ③ DIN 332-D ④ DIN 332 ⑤ Feather key/keyway DIN 6885-1 ⑦ ISO 4762 ⑧ Without locating shoulder +1 mm
⑪ Use bores only for foot-mounted design

1) AD depends on the motor options, for other dimensions, see page 9/46.

2) FDAZS/FZAZS not possible

© Innomotics 2023

4

Gearbox FZ.F./FD.F.49 in a flange-mounted design

FF030, FAF030, FAFS030, FAFT030

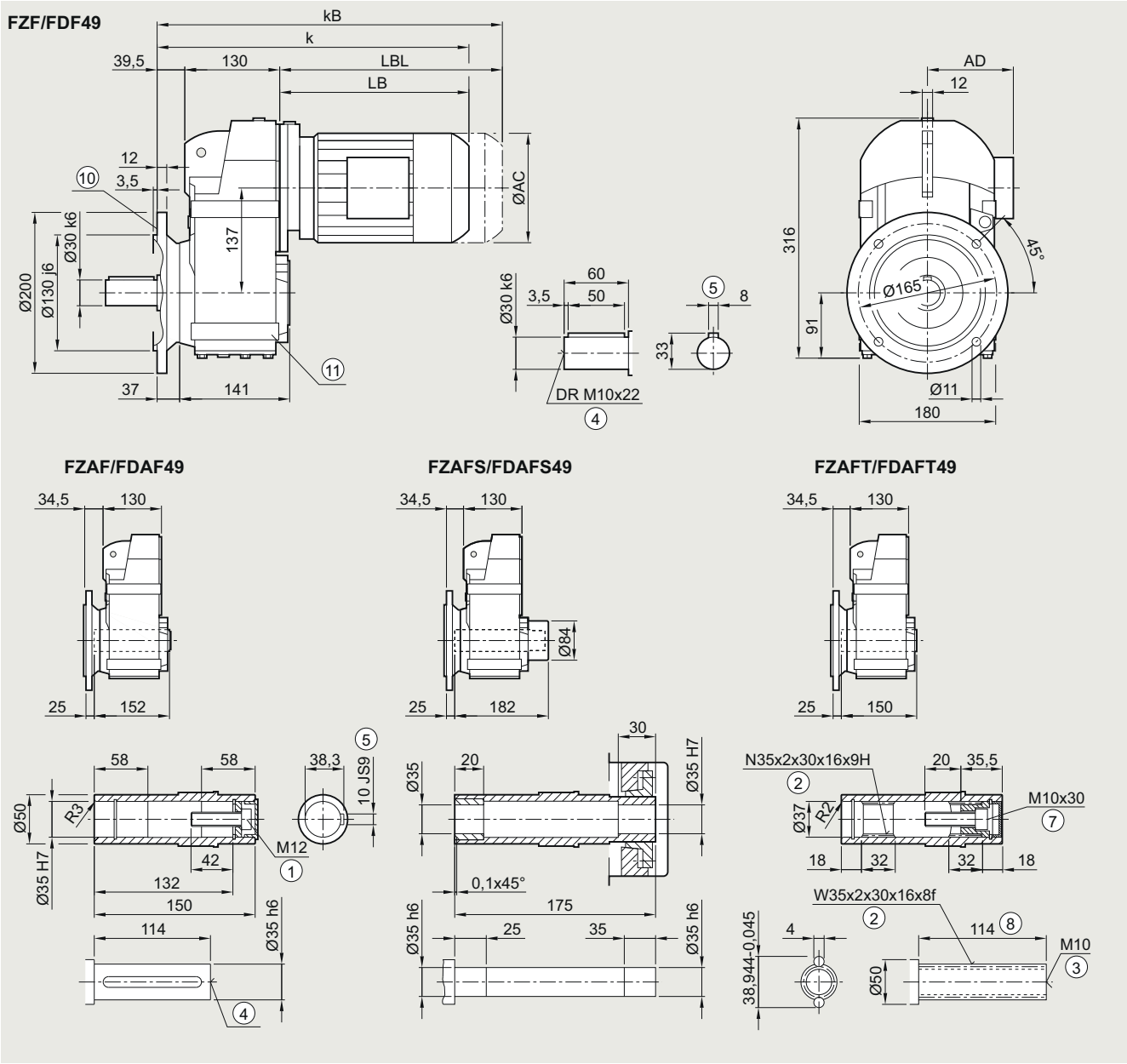

Motor	LE 63	63Z	71	71Z	71Y	80	80Z	90	90Z	100	100Z	112[2)]	112Z[2)]	132[2)]	132Z[2)]
AC	117.8	117.8	138.8	138.8	138.8	156.3	156.3	173.8	173.8	198.0	198.0	222.0	222.0	264.0	264.0
AD[1)]	124.0	124.0	134.0	134.0	134.0	149.2	149.2	154.2	154.2	170.5	170.5	181.5	181.5	207.0	207.0
k	354.0	380.0	386.0	394.0	434.0	450.0	485.0	511.5	551.5	568.0	603.0	578.0	612.5	631.0	681.0
kB	398.5	424.5	441.0	460.0	500.0	510.0	545.0	581.5	621.5	646.5	681.5	651.0	685.5	735.5	785.5
LB	184.5	210.5	216.5	235.5	275.5	280.5	315.5	342.0	382.0	398.5	433.5	408.5	443.0	461.5	511.5
LBL	229.0	255.0	271.5	290.5	430.5	340.5	375.5	412.0	452.0	477.0	512.0	481.5	516.0	566.0	616.0

① ISO 4014 ② DIN 5480 ③ DIN 332-D ④ DIN 332 ⑤ Feather key/keyway DIN 6885-1 ⑦ ISO 4762 ⑧ Without locating shoulder +1 mm
⑩ For inner contour, see page 4/124 ⑪ Use bores only for foot-mounted design
1) AD depends on the motor options, for other dimensions, see page 9/46. 2) FADAFS/FZAFS not possible

© Innomotics 2023

Gearbox FZ../FD..49 in a foot-mounted design

F030, FA030, FAS030, FAT030

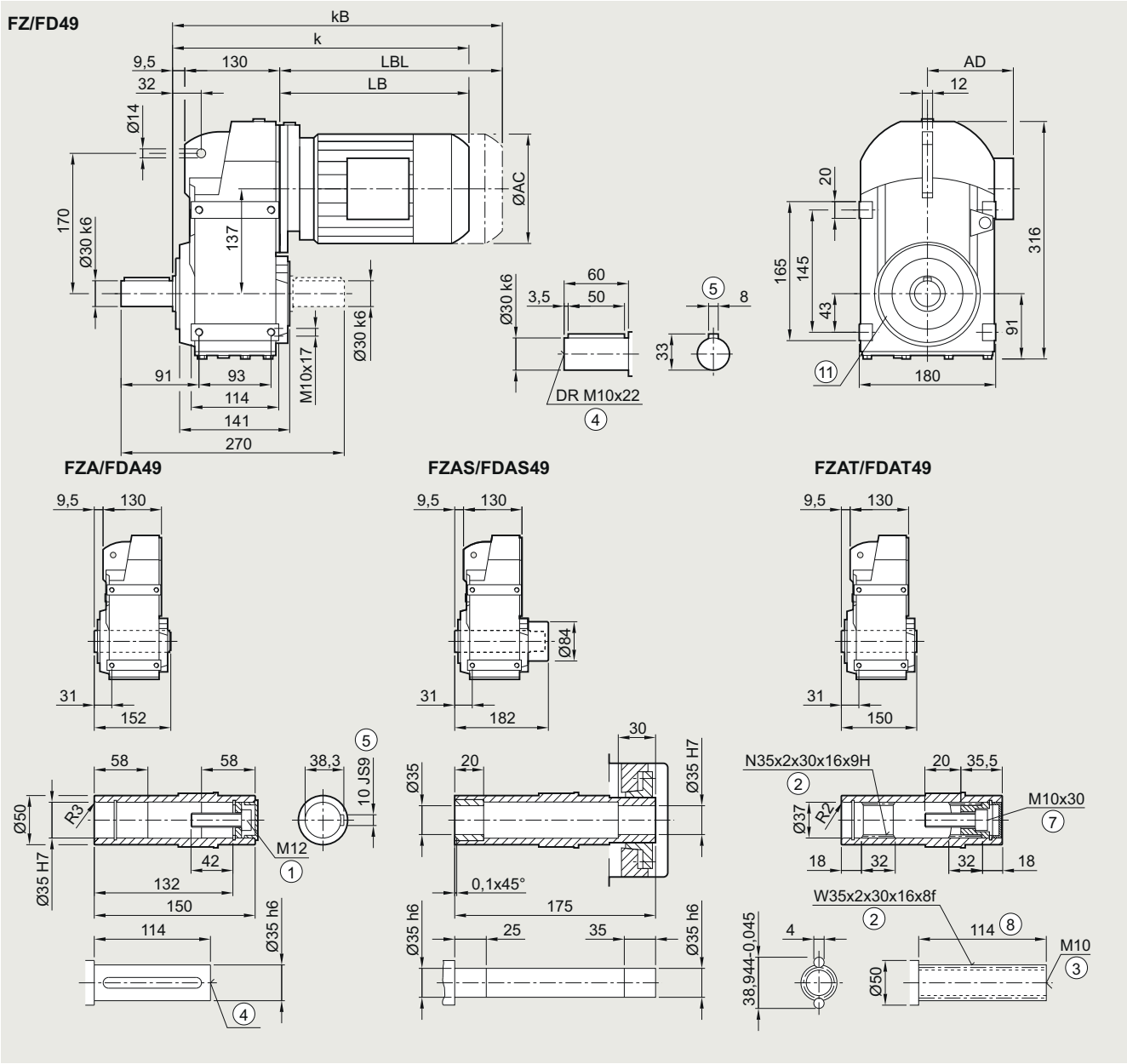

Motor	LE 63	63Z	71	71Z	71Y	80	80Z	90	90Z	100	100Z	112[2]	112Z[2]	132[2]	132Z[2]
AC	117.8	117.8	138.8	138.8	138.8	156.3	156.3	173.8	173.8	198.0	198.0	222.0	222.0	264.0	264.0
AD[1]	124.0	124.0	134.0	134.0	134.0	149.2	149.2	154.2	154.2	170.5	170.5	181.5	181.5	207.0	207.0
k	324.0	350.0	356.0	375.0	415.0	420.0	455.0	481.5	521.5	538.0	573.0	548.0	582.5	601.0	651.0
kB	368.5	394.5	411.0	430.0	470.0	480.0	515.0	551.5	591.5	616.5	651.5	621.0	655.5	705.5	755.5
LB	184.5	210.5	216.5	235.5	275.5	280.5	315.5	342.0	382.0	398.5	433.5	408.5	443.0	461.5	511.5
LBL	229.0	255.0	271.5	290.5	430.5	340.5	375.5	412.0	452.0	477.0	512.0	481.5	516.0	566.0	616.0

① ISO 4014 ② DIN 5480 ③ DIN 332-D ④ DIN 332 ⑤ Feather key/keyway DIN 6885-1 ⑦ ISO 4762 ⑧ Without locating shoulder +1 mm
⑪ Use bores only for housing flange design

1) AD depends on the motor options, for other dimensions, see page 9/46.]

2) FDAS/FZAS not possible

© Innomotics 2023

4

Gearbox FZAD./FDAD.69 in a shaft-mounted design

FAD030, FADS030, FADT030

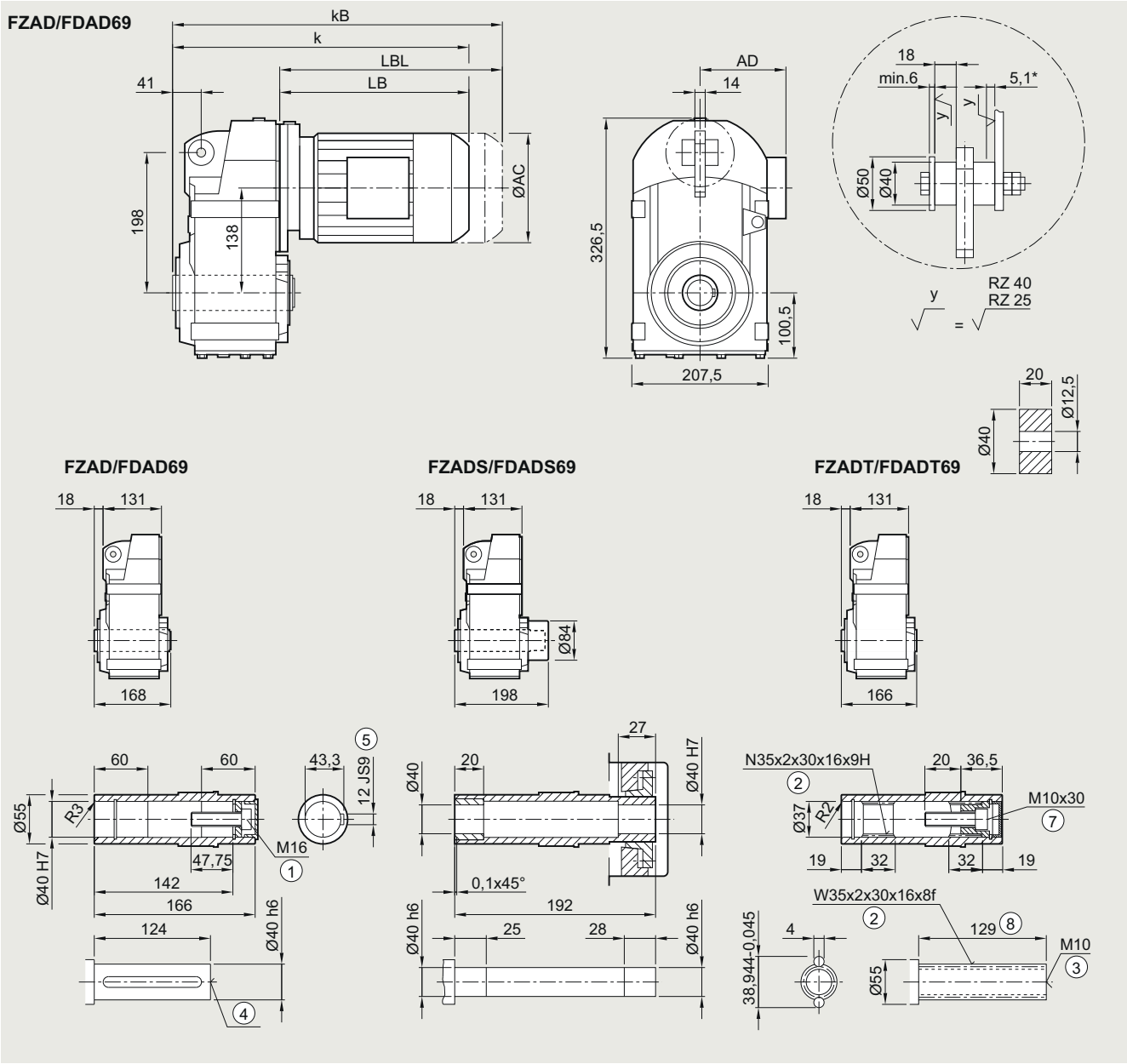

Motor	LE 63	63Z	71	71Z	71Y	80	80Z	90	90Z	100	100Z	112[2]	112Z[2]	132[2]	132Z[2]
AC	117.8	117.8	138.8	138.8	138.8	156.3	156.3	173.8	173.8	198.0	198.0	222.0	222.0	264.0	264.0
AD[1]	124.0	124.0	134.0	134.0	134.0	149.2	149.2	154.2	154.2	170.5	170.5	181.5	181.5	207.0	207.0
k	333.5	359.5	365.5	384.5	424.5	429.5	464.5	491.0	531.0	547.5	582.5	557.5	592.0	610.5	660.5
kB	378.0	404.0	420.5	439.5	479.5	489.5	524.5	561.0	601.0	626.0	661.0	630.5	665.0	715.0	765.0
LB	184.5	210.5	216.5	235.5	275.5	280.5	315.5	342.0	382.0	398.5	433.5	408.5	443.0	461.5	511.5
LBL	229.0	255.0	271.5	290.5	340.5	340.5	375.5	412.0	452.0	477.0	512.0	481.5	516.0	566.0	616.0

① ISO 4014 ② DIN 5480 ③ DIN 332-D ④ DIN 332 ⑤ Feather key/keyway DIN 6885-1 ⑦ ISO 4762 ⑧ Without locating shoulder +1 mm
[1] AD depends on the motor options, for other dimensions, see page 9/46. [2] FDADS/FZADS not possible * Spring compression at max. torque

© Innomotics 2023

Gearbox FZ.Z./FD.Z.69 in a housing flange design

FZ030, FAZ030, FAZS030, FAZT030

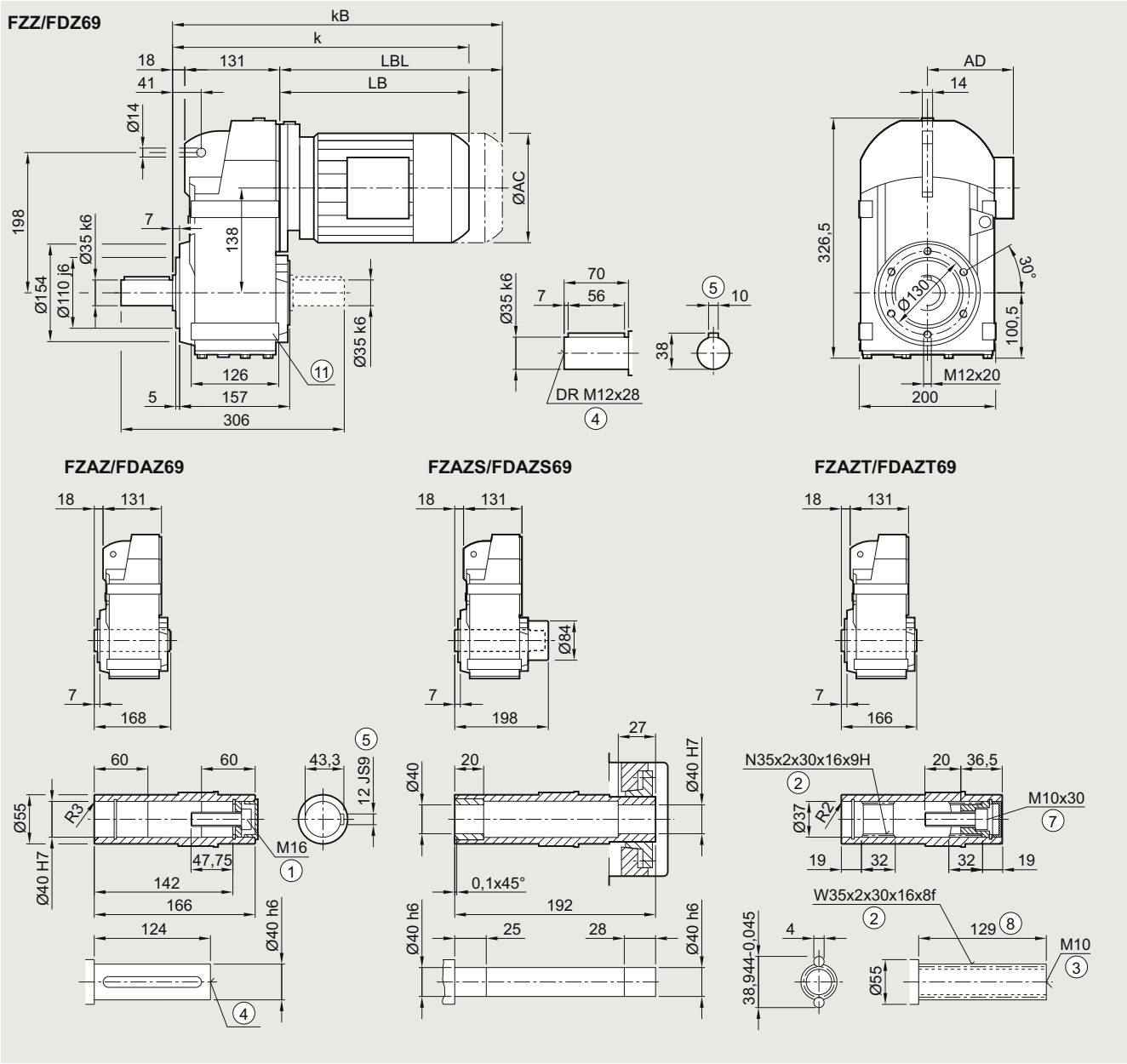

Motor	LE 63	63Z	71	71Z	71Y	80	80Z	90	90Z	100	100Z	112[2]	112Z[2]	132[2]	132Z[2]
AC	117.8	117.8	138.8	138.8	138.8	156.3	156.3	173.8	173.8	198.0	198.0	222.0	222.0	264.0	264.0
AD[1]	124.0	124.0	134.0	134.0	134.0	149.2	149.2	154.2	154.2	170.5	170.5	181.5	181.5	207.0	207.0
k	333.5	359.5	365.5	384.5	424.5	429.5	464.5	491.0	531.0	547.5	582.5	557.5	592.0	610.5	660.5
kB	378.0	404.0	420.5	439.5	479.5	489.5	524.5	561.0	601.0	626.0	661.0	630.5	665.0	715.0	765.0
LB	184.5	210.5	216.5	235.5	275.5	280.5	315.5	342.0	382.0	398.5	433.5	408.5	443.0	461.5	511.5
LBL	229.0	255.0	271.5	290.5	340.5	340.5	375.5	412.0	452.0	477.0	512.0	481.5	516.0	566.0	616.0

① ISO 4014 ② DIN 5480 ③ DIN 332-D ④ DIN 332 ⑤ Feather key/keyway DIN 6885-1 ⑦ ISO 4762 ⑧ Without locating shoulder +1 mm
⑪ Use bores only for foot-mounted design
1) AD depends on the motor options, for other dimensions, see page 9/46.
2) FDAZS/FZAZS not possible

© Innomotics 2023

Gearbox FZ.F./FD.F.69 in a flange-mounted design

FF030, FAF030, FAFS030, FAFT030

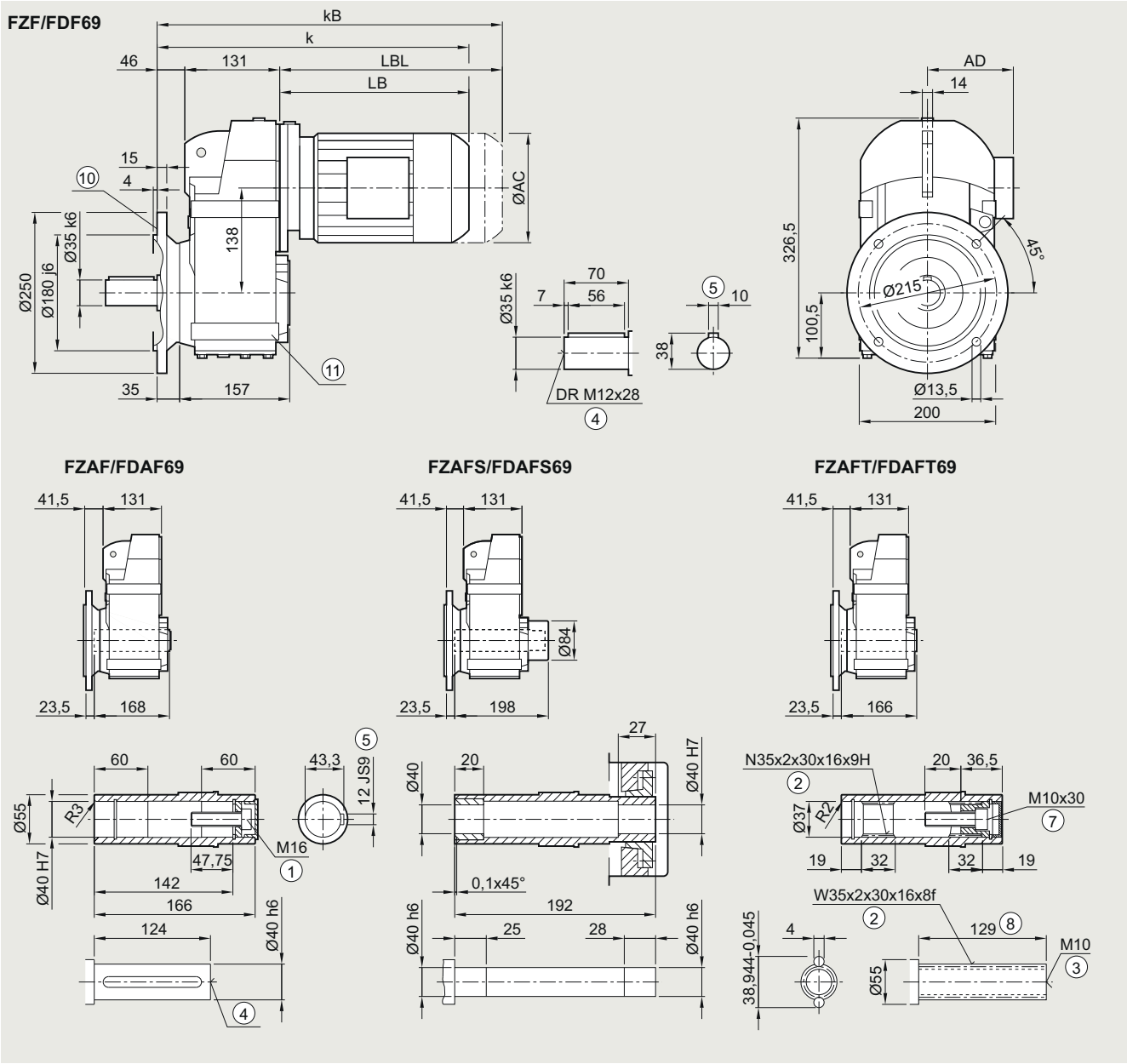

Motor	LE 63	63Z	71	71Z	71Y	80	80Z	90	90Z	100	100Z	112[2)]	112Z[2)]	132[2)]	132Z[2)]
AC	117.8	117.8	138.8	138.8	138.8	156.3	156.3	173.8	173.8	198.0	198.0	222.0	222.0	264.0	264.0
AD[1)]	124.0	124.0	134.0	134.0	134.0	149.2	149.2	154.2	154.2	170.5	170.5	181.5	181.5	207.0	207.0
k	361.5	387.5	393.5	412.5	452.5	457.5	492.5	519.0	559.0	575.5	610.5	585.5	620.0	638.5	688.5
kB	406.0	432.0	448.5	467.5	507.5	517.5	552.5	589.0	629.0	654.0	689.0	658.5	693.0	743.0	793.0
LB	184.5	210.5	216.5	235.5	275.5	280.5	315.5	342.0	382.0	398.5	433.5	408.5	443.0	461.5	511.5
LBL	229.0	255.0	271.5	290.5	340.5	340.5	375.5	412.0	452.0	477.0	512.0	481.5	516.0	566.0	616.0

① ISO 4014 ② DIN 5480 ③ DIN 332-D ④ DIN 332 ⑤ Feather key/keyway DIN 6885-1 ⑦ ISO 4762 ⑧ Without locating shoulder +1 mm
⑩ For inner contour, see page 4/124 ⑪ Use bores only for foot-mounted design
1) AD depends on the motor options, for other dimensions, see page 9/46. 2) FADAFS/FZAFS not possible

© Innomotics 2023

Gearbox FZ../FD..69 in a foot-mounted design

F030, FA030, FAS030, FAT030

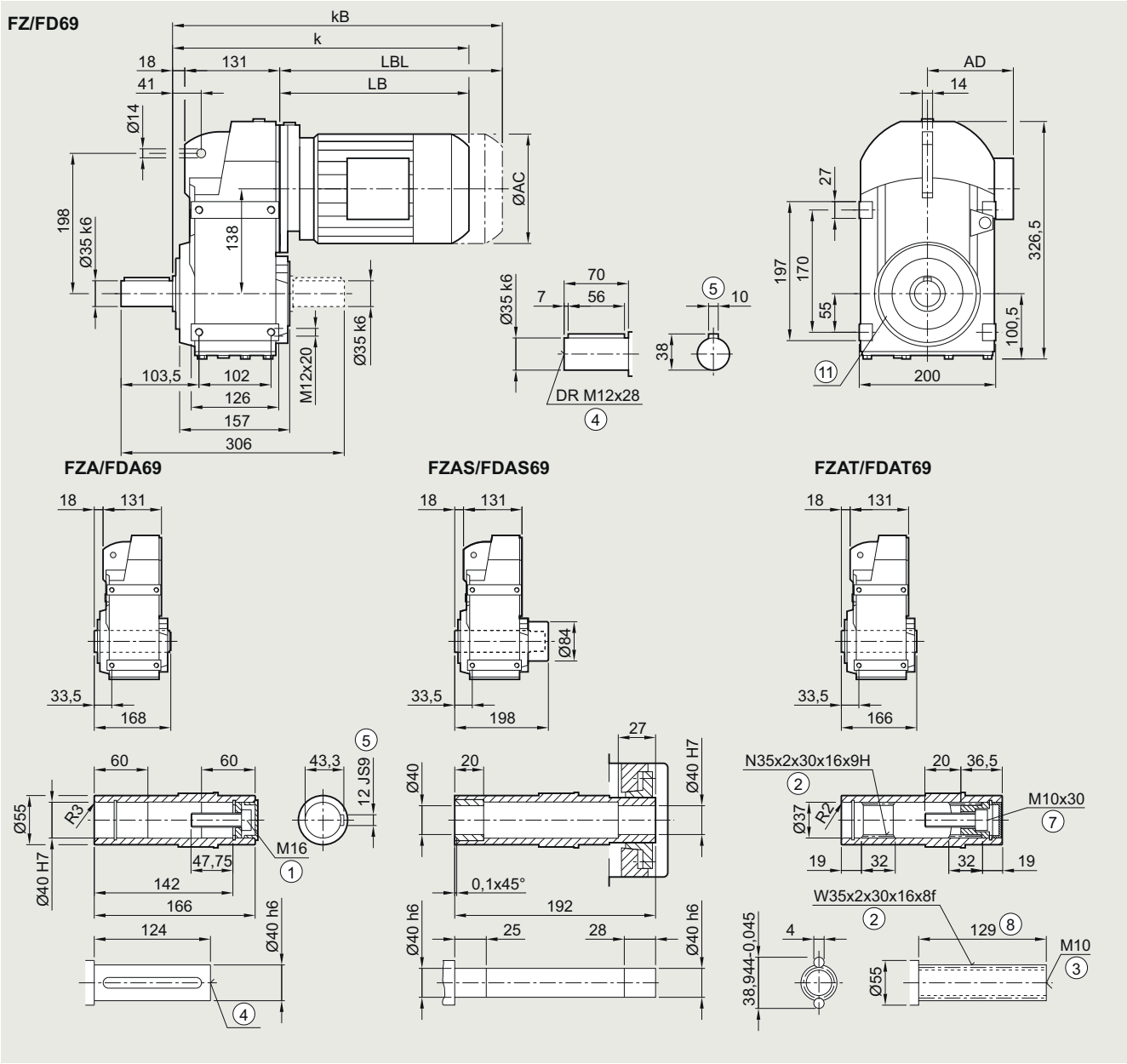

Motor	LE 63	63Z	71	71Z	71Y	80	80Z	90	90Z	100	100Z	112[2]	112Z[2]	132[2]	132Z[2]
AC	117.8	117.8	138.8	138.8	138.8	156.3	156.3	173.8	173.8	198.0	198.0	222.0	222.0	264.0	264.0
AD[1]	124.0	124.0	134.0	134.0	134.0	149.2	149.2	154.2	154.2	170.5	170.5	181.5	181.5	207.0	207.0
k	333.5	359.5	365.5	384.5	424.5	429.5	464.5	491.0	531.0	547.5	582.5	557.5	592.0	610.5	660.5
kB	378.0	404.0	420.5	439.5	479.5	489.5	524.5	561.0	601.0	626.0	661.0	630.5	665.0	715.0	765.0
LB	184.5	210.5	216.5	235.5	275.5	280.5	315.5	342.0	382.0	398.5	433.5	408.5	443.0	461.5	511.5
LBL	229.0	255.0	271.5	290.5	340.5	340.5	375.5	412.0	452.0	477.0	512.0	481.5	516.0	566.0	616.0

① ISO 4014 ② DIN 5480 ③ DIN 332-D ④ DIN 332 ⑤ Feather key/keyway DIN 6885-1 ⑦ ISO 4762 ⑧ Without locating shoulder +1 mm
⑪ Use bores only for housing flange design
1) AD depends on the motor options, for other dimensions, see page 9/46.]
2) FDAS/FZAS not possible

© Innomotics 2023

4

Gearbox FZAD./FDAD.79 in a shaft-mounted design

FAD030, FADS030, FADT030

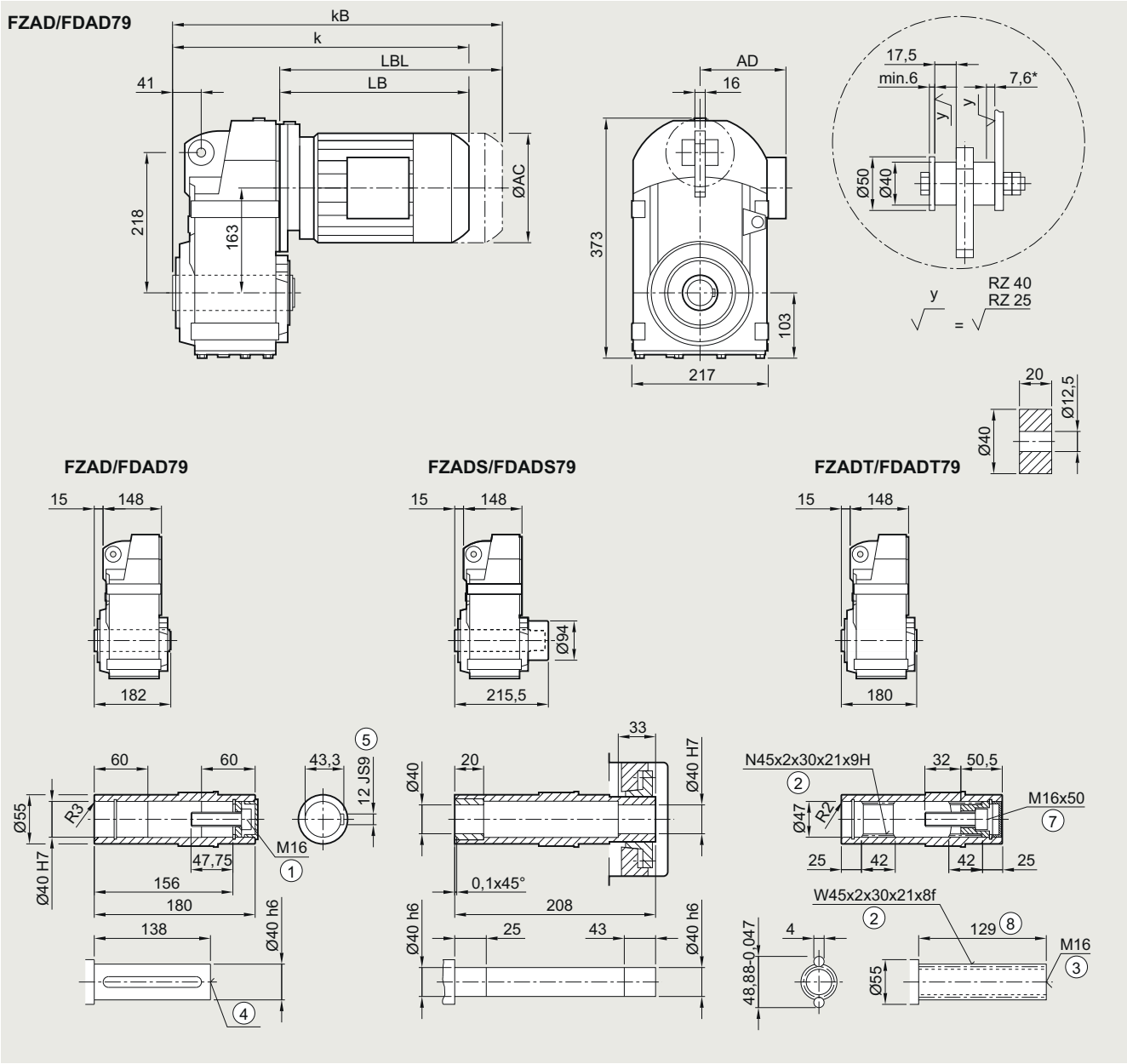

Motor	LE 71	71Z	71Y	80	80Z	90	90Z	100	100Z	112	112Z	132	132Z	160[2]	160Z[2]
AC	138.8	138.8	138.8	156.3	156.3	173.8	173.8	198.0	198.0	222.0	222.0	264.0	264.0	318.0	318.0
AD[1]	134.0	134.0	134.0	149.2	149.2	154.2	154.2	170.5	170.5	181.5	181.5	207.0	207.0	241.0	241.0
k	377.5	396.5	436.5	437.5	472.5	499.0	539.0	555.5	590.5	565.5	590.5	618.5	668.5	700.5	760.5
kB	432.5	451.5	491.5	497.5	532.5	569.0	609.0	634.0	669.0	638.5	663.5	723.0	773.0	816.5	876.5
LB	214.5	233.5	273.5	274.5	309.5	336.0	376.0	392.5	427.5	402.5	427.5	455.5	505.5	537.5	597.5
LBL	269.5	288.5	328.5	334.5	369.5	406.0	446.0	471.0	506.0	475.5	500.5	560.0	610.0	653.5	713.5

① ISO 4014 ② DIN 5480 ③ DIN 332-D ④ DIN 332 ⑤ Feather key/keyway DIN 6885-1 ⑦ ISO 4762 ⑧ Without locating shoulder +1 mm
[1] AD depends on the motor options, for other dimensions, see page 9/46. [2] FDAS/FZAS not possible * Spring compression at max. torque

© Innomotics 2023

Gearbox FZ.Z./FD.Z.79 in a housing flange design

FZ030, FAZ030, FAZS030, FAZT030

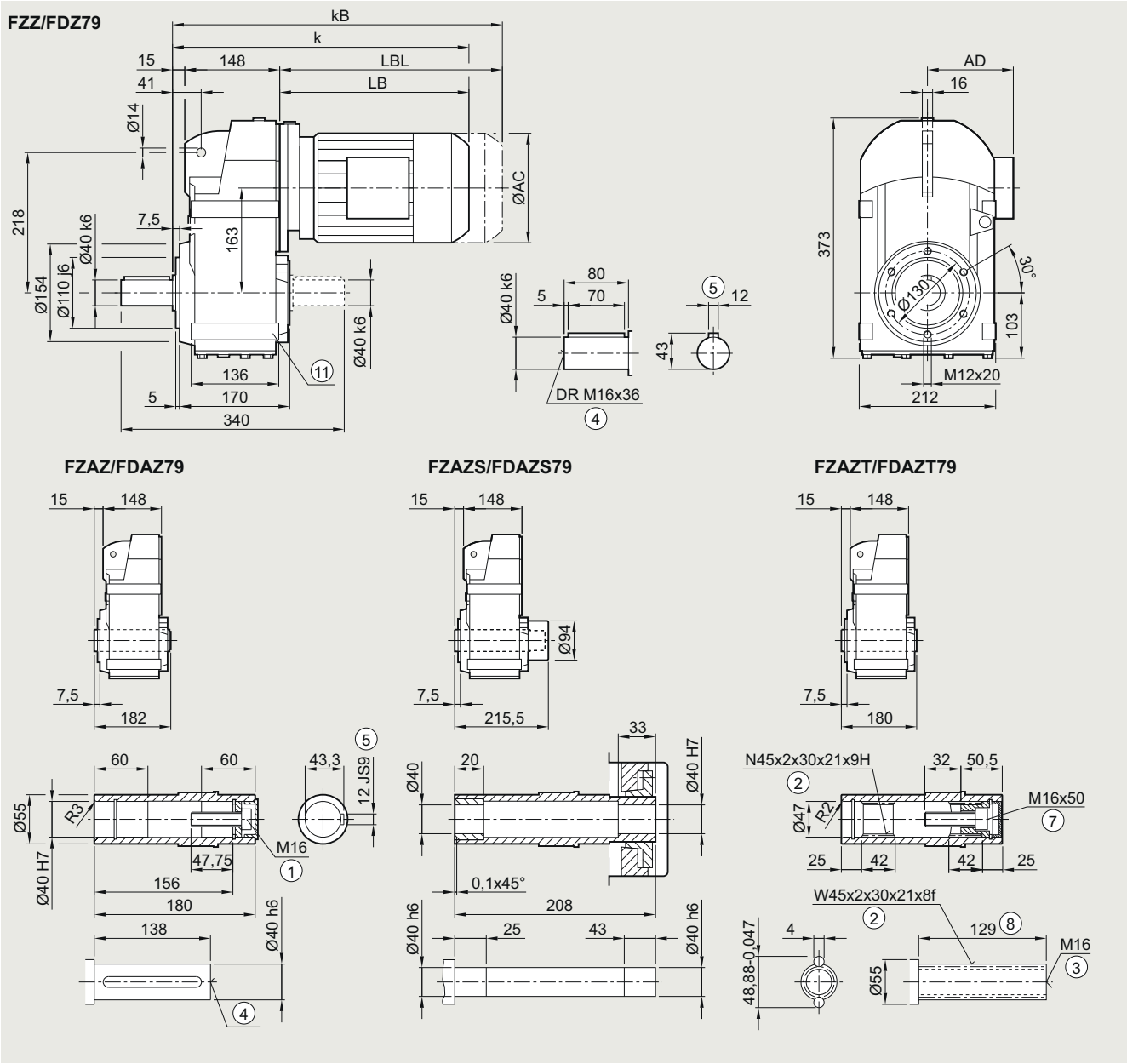

Motor	LE 71	71Z	71Y	80	80Z	90	90Z	100	100Z	112	112Z	132	132Z	160[2]	160Z[2]
AC	138.8	138.8	138.8	156.3	156.3	173.8	173.8	198.0	198.0	222.0	222.0	264.0	264.0	318.0	318.0
AD[1]	134.0	134.0	134.0	149.2	149.2	154.2	154.2	170.5	170.5	181.5	181.5	207.0	207.0	241.0	241.0
k	377.5	396.5	436.5	437.5	472.5	499.0	539.0	555.5	590.5	565.5	590.5	618.5	668.5	700.5	760.5
kB	432.5	451.5	491.5	497.5	532.5	569.0	609.0	634.0	669.0	638.5	663.5	723.0	773.0	816.5	876.5
LB	214.5	233.5	273.5	274.5	309.5	336.0	376.0	392.5	427.5	402.5	427.5	455.5	505.5	537.5	597.5
LBL	269.5	288.5	328.5	334.5	369.5	406.0	446.0	471.0	506.0	475.5	500.5	560.0	610.0	653.5	713.5

① ISO 4014 ② DIN 5480 ③ DIN 332-D ④ DIN 332 ⑤ Feather key/keyway DIN 6885-1 ⑦ ISO 4762 ⑧ Without locating shoulder +1 mm
⑪ Use bores only for foot-mounted design
[1] AD depends on the motor options, for other dimensions, see page 9/46.]
[2] FDAZS/FZAZS not possible

© Innomotics 2023

Gearbox FZ.F./FD.F.79 in a flange-mounted design

FF030, FAF030, FAFS030, FAFT030

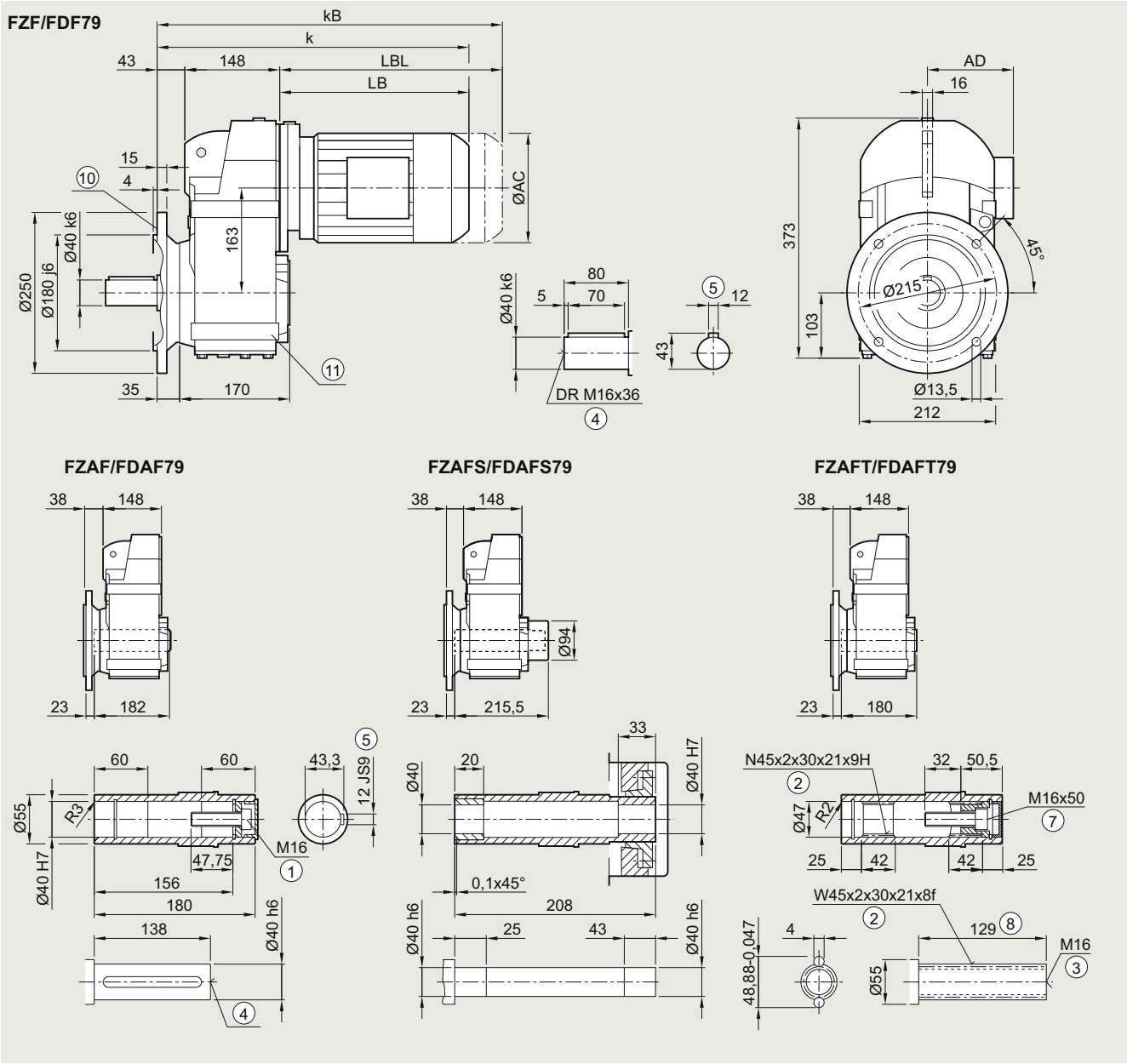

Motor	LE 71	71Z	71Y	80	80Z	90	90Z	100	100Z	112	112Z	132	132Z	160[2]	160Z[2]
AC	138.8	138.8	138.8	156.3	156.3	173.8	173.8	198.0	198.0	222.0	222.0	264.0	264.0	318.0	318.0
AD[1]	134.0	134.0	134.0	149.2	149.2	154.2	154.2	170.5	170.5	181.5	181.5	207.0	207.0	241.0	241.0
k	405.5	424.5	464.5	465.5	500.5	527.0	567.0	583.5	618.5	593.5	618.5	646.5	696.5	728.5	788.5
kB	460.5	479.5	519.5	525.5	560.5	597.0	637.0	662.0	697.0	666.5	691.5	751.0	801.0	844.5	904.5
LB	214.5	233.5	273.5	274.5	309.5	336.0	376.0	392.5	427.5	402.5	427.5	455.5	505.5	537.5	597.5
LBL	269.5	288.5	328.5	334.5	369.5	406.0	446.0	471.0	506.0	475.5	500.5	560.0	610.0	653.5	713.5

① ISO 4014 ② DIN 5480 ③ DIN 332-D ④ DIN 332 ⑤ Feather key/keyway DIN 6885-1 ⑦ ISO 4762 ⑧ Without locating shoulder +1 mm
⑩ For inner contour, see page 4/124 ⑪ Use bores only for foot-mounted design
[1] AD depends on the motor options, for other dimensions, see page 9/46. [2] FADAFS/FZAFS not possible

© Innomotics 2023

Gearbox FZ../FD..79 in a foot-mounted design

F030, FA030, FAS030, FAT030

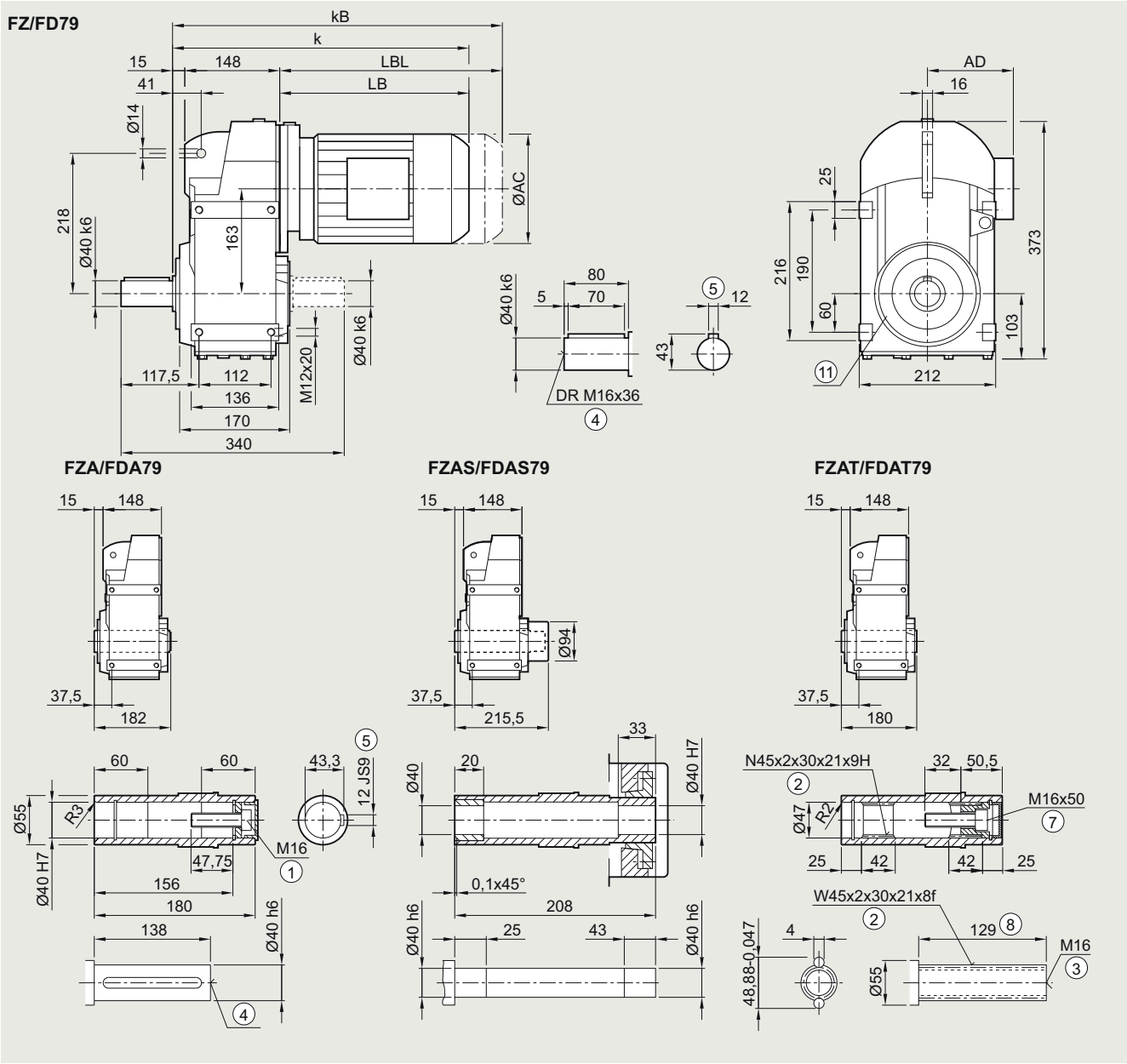

Motor	LE 71	71Z	71Y	80	80Z	90	90Z	100	100Z	112	112Z	132	132Z	160[2]	160Z[2]
AC	138.8	138.8	138.8	156.3	156.3	173.8	173.8	198.0	198.0	222.0	222.0	264.0	264.0	318.0	318.0
AD[1]	134.0	134.0	134.0	149.2	149.2	154.2	154.2	170.5	170.5	181.5	181.5	207.0	207.0	241.0	241.0
k	377.5	396.5	436.5	437.5	472.5	499.0	539.0	555.5	590.5	565.5	590.5	618.5	668.5	700.5	760.5
kB	432.5	451.5	491.5	497.5	532.5	569.0	609.0	634.0	669.0	638.5	663.5	723.0	773.0	816.5	876.5
LB	214.5	233.5	273.5	274.5	309.5	336.0	376.0	392.5	427.5	402.5	427.5	455.5	505.5	537.5	597.5
LBL	269.5	288.5	328.5	334.5	369.5	406.0	446.0	471.0	506.0	475.5	500.5	560.0	610.0	653.5	713.5

① ISO 4014 ② DIN 5480 ③ DIN 332-D ④ DIN 332 ⑤ Feather key/keyway DIN 6885-1 ⑦ ISO 4762 ⑧ Without locating shoulder +1 mm
⑪ Use bores only for housing flange design

1) AD depends on the motor options, for other dimensions, see page 9/46.]

2) FDAS/FZAS not possible

© Innomotics 2023

4

Gearbox FZAD./FDAD.89 in a shaft-mounted design

FAD030, FADS030, FADT030

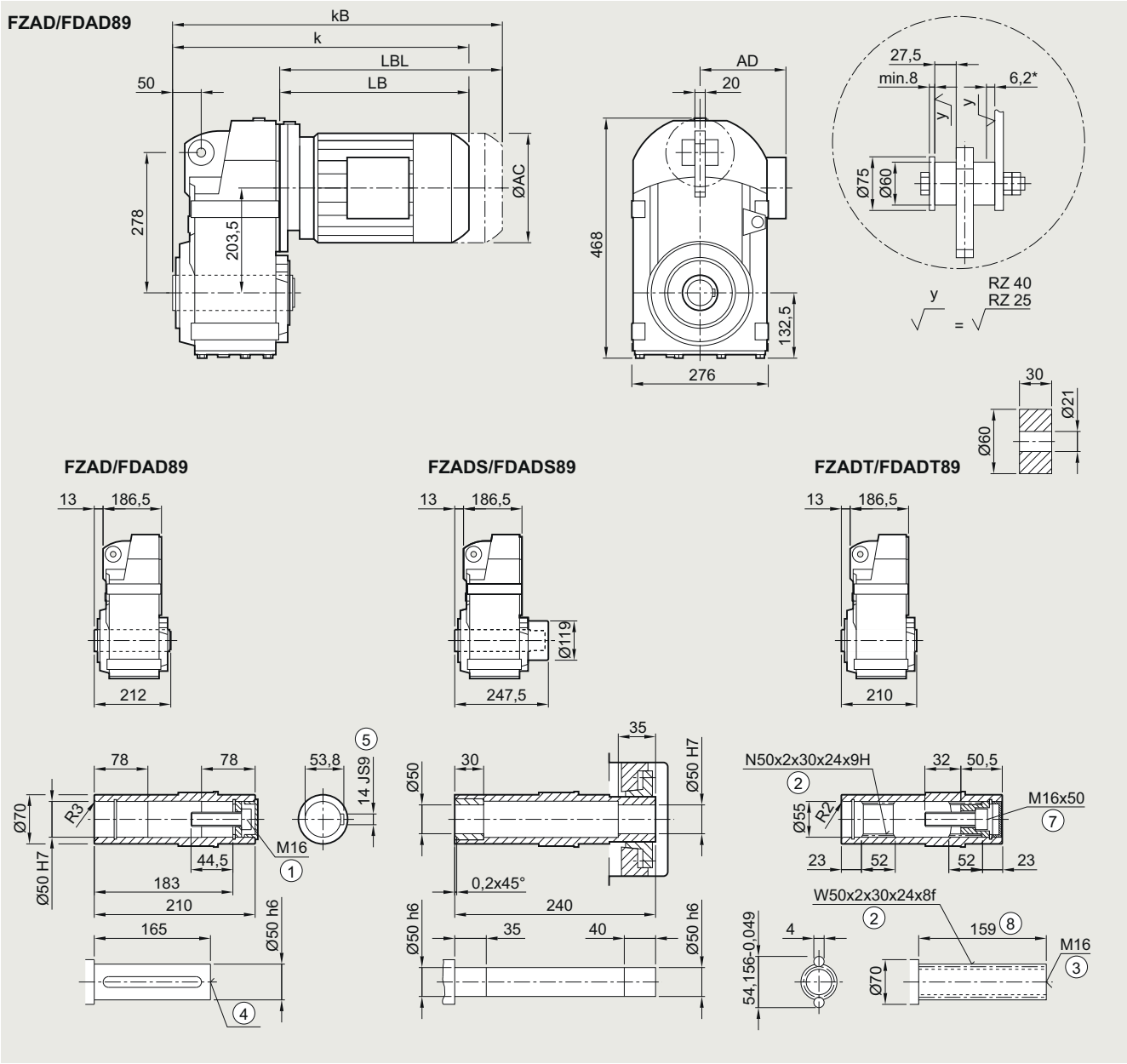

Motor	LE 80	80Z	90	90Z	100	100Z	112	112Z	132	132Z	160	160Z	LES 180[2]	180Z[2]
AC	156.3	156.3	173.8	173.8	198.0	198.0	222.0	222.0	264.0	264.0	318.0	318.0	352.5	352.5
AD[1]	149.2	149.2	154.2	154.2	170.5	170.5	181.5	181.5	207.0	207.0	241.0	241.0	292.0	292.0
k	461.0	496.0	522.5	562.5	575.0	610.0	585.0	610.0	638.0	688.0	720.0	780.0	793.0	823.0
kB	521.0	556.0	592.5	632.5	653.5	688.5	658.0	683.0	742.5	792.5	836.0	896.0	922.0	952.0
LB	261.5	296.5	323.0	363.0	375.5	410.5	385.5	410.5	438.5	488.5	520.5	580.5	593.5	623.5
LBL	321.5	356.5	393.0	433.0	454.0	489.0	458.5	483.5	543.0	593.0	636.5	696.5	722.5	752.5

① ISO 4014 ② DIN 5480 ③ DIN 332-D ④ DIN 332 ⑤ Feather key/keyway DIN 6885-1 ⑦ ISO 4762 ⑧ Without locating shoulder +1 mm
[1] AD depends on the motor options, for other dimensions, see page 9/46. [2] FDAS/FZAS not possible * Spring compression at max. torque

© Innomotics 2023

Gearbox FZ.Z./FD.Z.89 in a housing flange design

FZ030, FAZ030, FAZS030, FAZT030

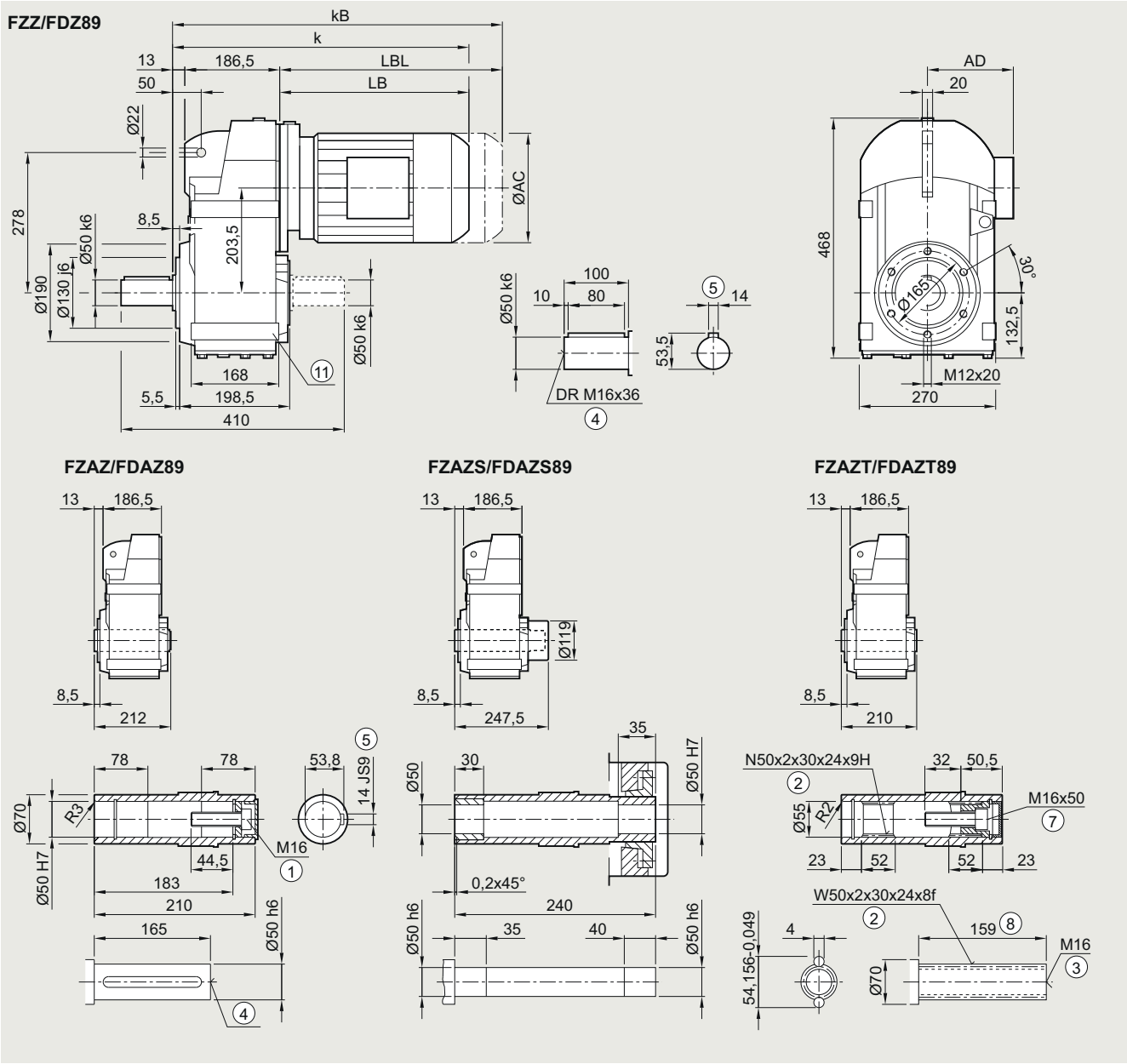

Motor	LE 80	80Z	90	90Z	100	100Z	112	112Z	132	132Z	160	160Z	LES 180[2]	180Z[2]
AC	156.3	156.3	173.8	173.8	198.0	198.0	222.0	222.0	264.0	264.0	318.0	318.0	352.5	352.5
AD[1]	149.2	149.2	154.2	154.2	170.5	170.5	181.5	181.5	207.0	207.0	241.0	241.0	292.0	292.0
k	461.0	496.0	522.5	562.5	575.0	610.0	585.0	610.0	638.0	688.0	720.0	780.0	793.0	823.0
kB	521.0	556.0	592.5	632.5	653.5	688.5	658.0	683.0	742.5	792.5	836.0	896.0	922.0	952.0
LB	261.5	296.5	323.0	363.0	375.5	410.5	385.5	410.5	438.5	488.5	520.5	580.5	593.5	623.5
LBL	321.5	356.5	393.0	433.0	454.0	489.0	458.5	483.5	543.0	593.0	636.5	696.5	722.5	752.5

① ISO 4014 ② DIN 5480 ③ DIN 332-D ④ DIN 332 ⑤ Feather key/keyway DIN 6885-1 ⑦ ISO 4762 ⑧ Without locating shoulder +1 mm
⑪ Use bores only for foot-mounted design
1) AD depends on the motor options, for other dimensions, see page 9/46.]
2) FDAS/FZAS not possible

© Innomotics 2023

Gearbox FZ.F./FD.F.89 in a flange-mounted design

FF030, FAF030, FAFS030, FAFT030

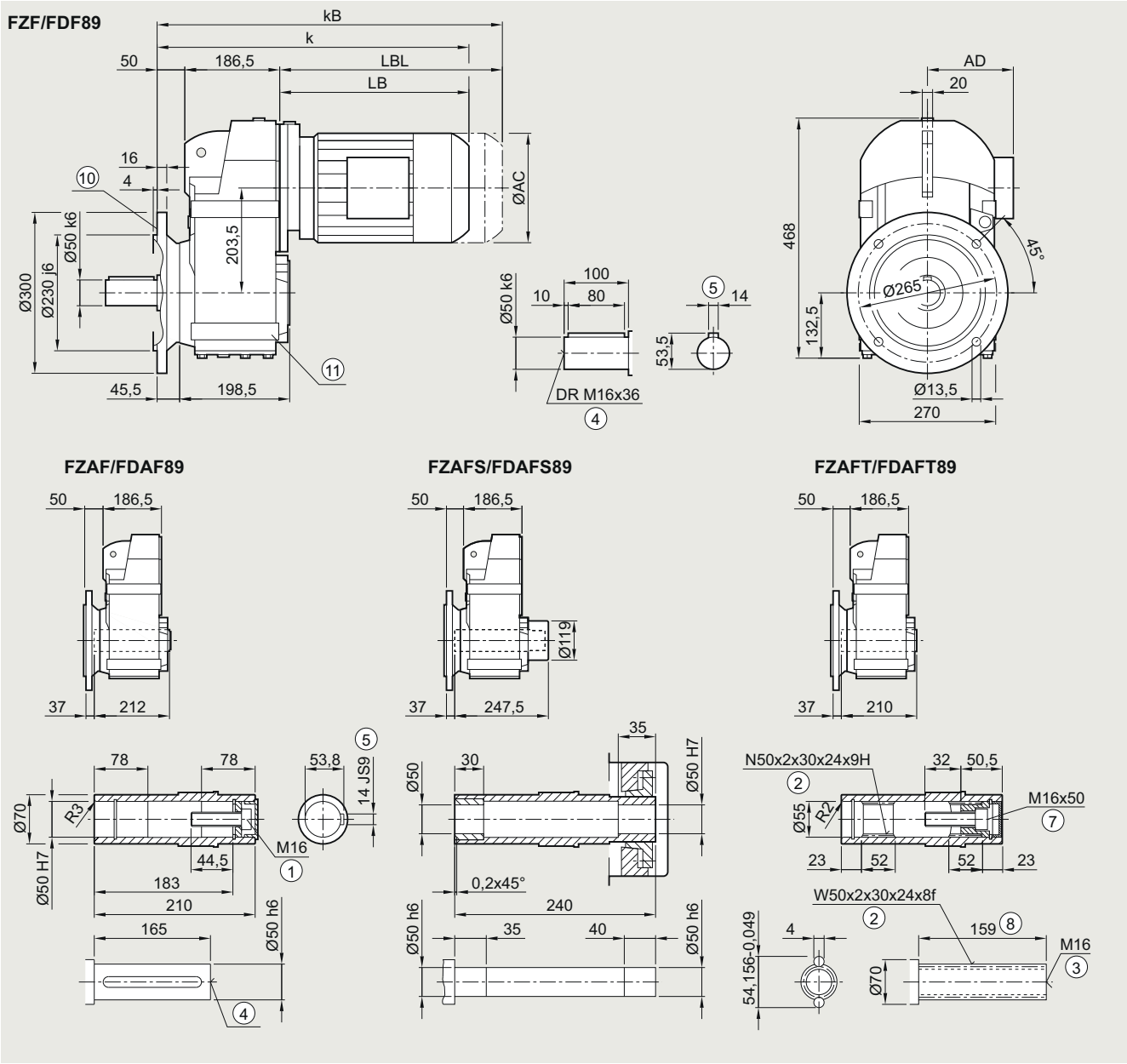

Motor	LE 80	80Z	90	90Z	100	100Z	112	112Z	132	132Z	160	160Z	LES 180[2]	180Z[2]
AC	156.3	156.3	173.8	173.8	198.0	198.0	222.0	222.0	264.0	264.0	318.0	318.0	352.5	352.5
AD[1]	149.2	149.2	154.2	154.2	170.5	170.5	181.5	181.5	207.0	207.0	241.0	241.0	292.0	292.0
k	498.0	533.0	559.5	599.5	612.0	647.0	622.0	647.0	675.0	725.0	757.0	817.0	830.0	860.0
kB	558.0	593.0	629.5	669.5	690.5	725.5	695.0	720.0	779.5	829.5	873.0	933.0	959.0	989.0
LB	261.5	296.5	323.0	363.0	375.5	410.5	385.5	410.5	438.5	488.5	520.5	580.5	593.5	623.5
LBL	321.5	356.5	393.0	433.0	454.0	489.0	458.5	483.5	543.0	593.0	636.5	696.5	722.5	752.5

① ISO 4014 ② DIN 5480 ③ DIN 332-D ④ DIN 332 ⑤ Feather key/keyway DIN 6885-1 ⑦ ISO 4762 ⑧ Without locating shoulder +1 mm
⑩ For inner contour, see page 4/124 ⑪ Use bores only for foot-mounted design
[1] AD depends on the motor options, for other dimensions, see page 9/46. [2] FADAFS/FZAFS not possible

© Innomotics 2023

Gearbox FZ.F./FD.F.89 in a flange-mounted design with VLplus reinforced bearing system (G30)

FF040, FAF040

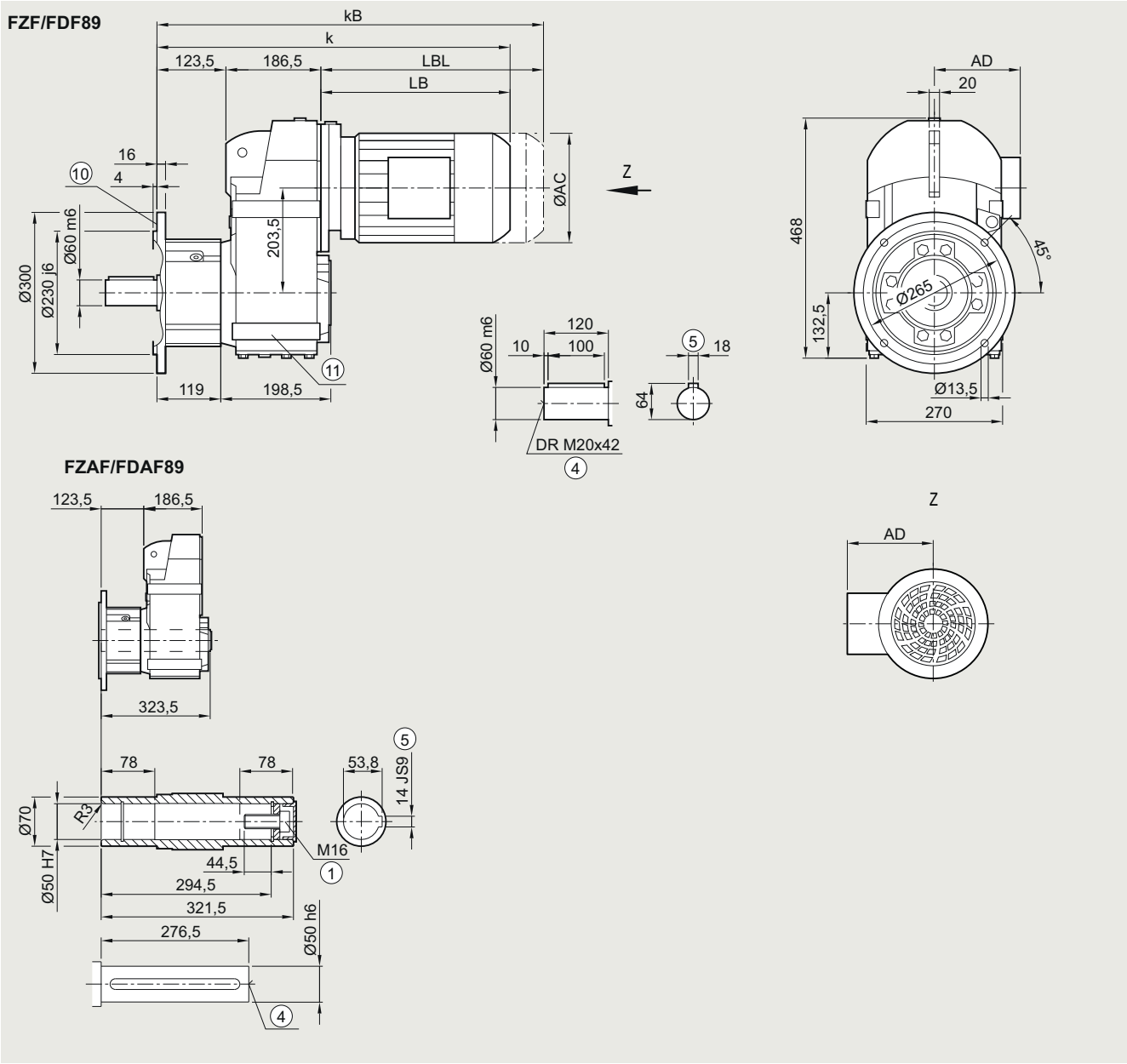

Motor	LE 80	80Z	90	90Z	100	100Z	112	112Z	132	132Z	160	160Z	LES 180	180Z
AC	156.3	156.3	173.8	173.8	198.0	198.0	222.0	222.0	264.0	264.0	318.0	318.0	352.5	352.5
AD[1)]	149.2	149.2	154.2	154.2	170.5	170.5	181.5	181.5	207.0	207.0	241.0	241.0	292.0	292.0
k	571.5	606.5	633.0	673.0	685.5	720.5	695.5	720.5	748.5	798.5	830.5	890.5	903.5	933.5
kB	631.5	666.5	703.0	743.0	764.0	799.0	768.5	793.5	853.0	903.0	946.5	1006.5	1033.0	1062.5
LB	261.5	296.5	323.0	363.0	375.5	410.5	385.5	410.5	438.5	488.5	520.5	580.5	593.5	623.5
LBL	321.5	356.5	393.0	433.0	454.0	489.0	458.5	483.5	543.0	593.0	636.5	696.5	722.5	752.5

① ISO 4014 ④ DIN 332 ⑤ Feather key/keyway DIN 6885-1 ⑪ Use bores only for foot-mounted design
⑩ For inner contour, see page 4/124 1) AD depends on the motor options, for other dimensions, see page 9/46.

© Innomotics 2023

Gearbox FZ../FD..89 in a foot-mounted design

F030, FA030, FAS030, FAT030

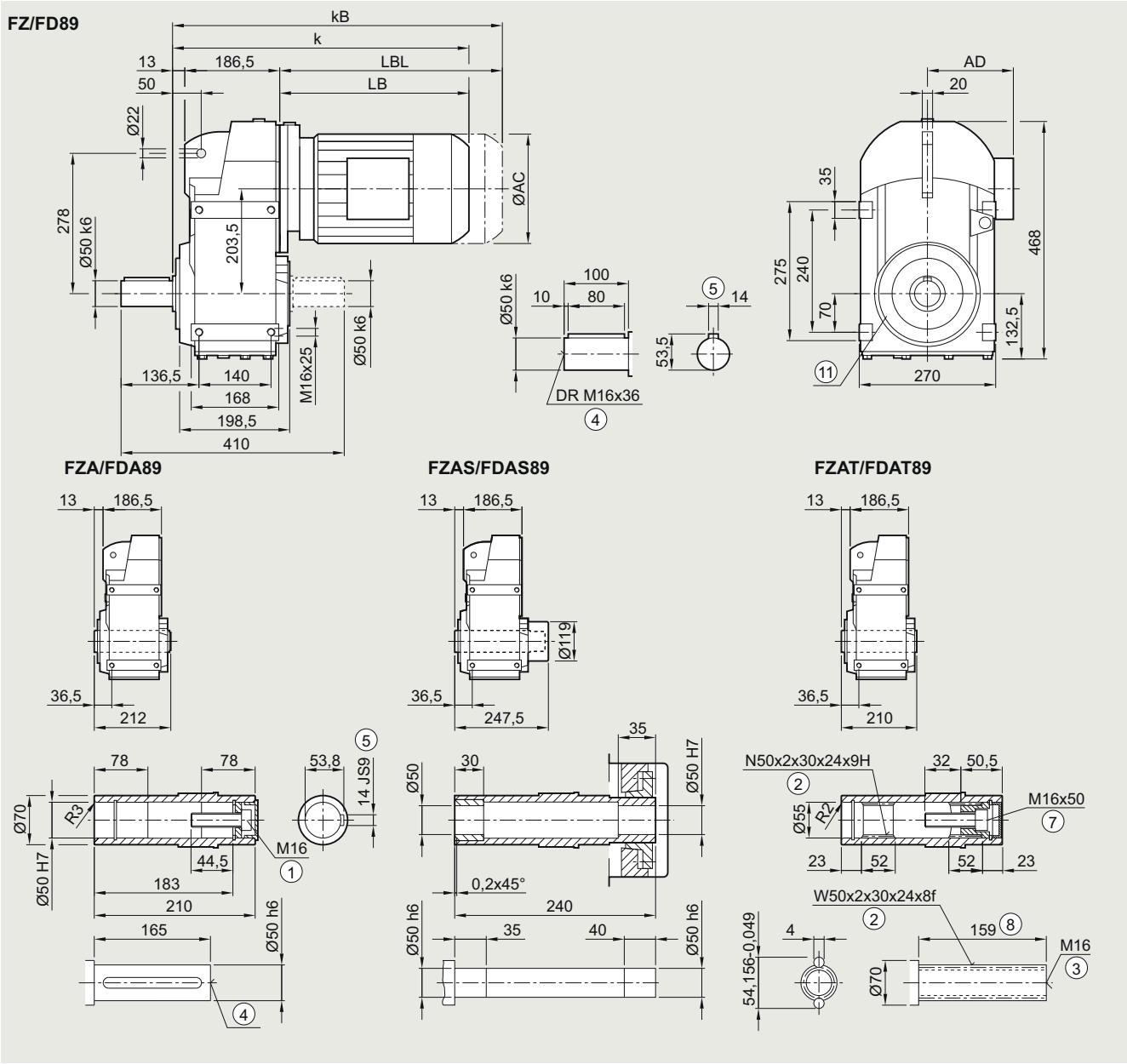

Motor	LE 80	80Z	90	90Z	100	100Z	112	112Z	132	132Z	160	160Z	LES 180[2]	180Z[2]
AC	156.3	156.3	173.8	173.8	198.0	198.0	222.0	222.0	264.0	264.0	318.0	318.0	352.5	352.5
AD[1]	149.2	149.2	154.2	154.2	170.5	170.5	181.5	181.5	207.0	207.0	241.0	241.0	292.0	292.0
k	461.0	496.0	522.5	562.5	575.0	610.0	585.0	610.0	638.0	688.0	720.0	780.0	793.0	823.0
kB	521.0	556.0	592.5	632.5	653.5	688.5	658.0	683.0	742.5	792.5	836.0	896.0	922.0	952.0
LB	261.5	296.5	323.0	363.0	375.5	410.5	385.5	410.5	438.5	488.5	520.5	580.5	593.5	623.5
LBL	321.5	356.5	393.0	433.0	454.0	489.0	458.5	483.5	543.0	593.0	636.5	696.5	722.5	752.5

① ISO 4014 ② DIN 5480 ③ DIN 332-D ④ DIN 332 ⑤ Feather key/keyway DIN 6885-1 ⑦ ISO 4762 ⑧ Without locating shoulder +1 mm
⑪ Use bores only for housing flange design
[1] AD depends on the motor options, for other dimensions, see page 9/46.]
[2] FDAS/FZAS not possible

© Innomotics 2023

Gearbox FZAD./FDAD.109 in a shaft-mounted design

FAD030, FADS030, FADT030

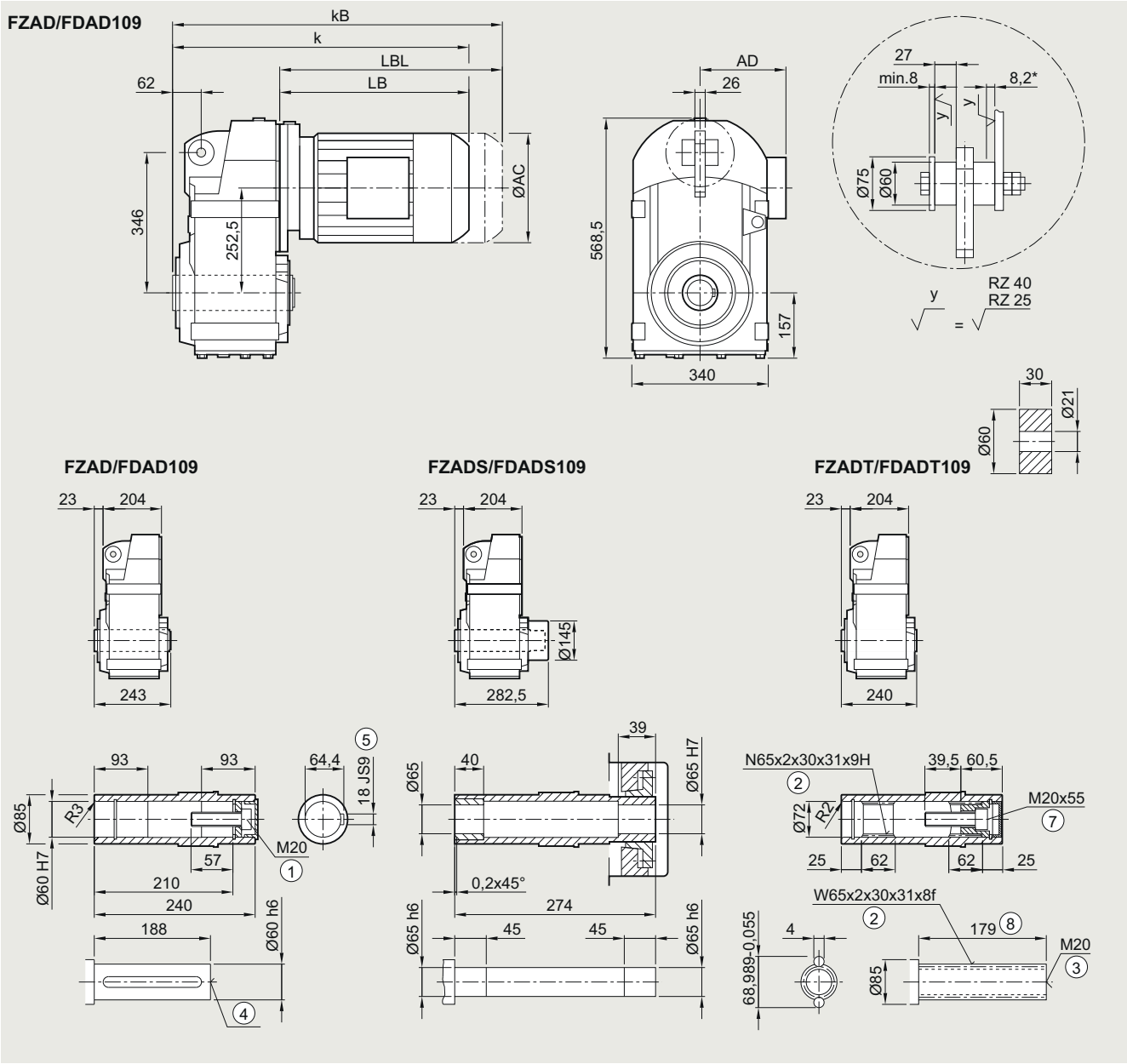

Motor	LE 90	90Z	100	100Z	112	112Z	132	132Z	160	160Z	LES 180	180Z	200	200Z	225[2]	225Y[2]
AC	173.8	173.8	198.0	198.0	222.0	222.0	264.0	264.0	318.0	318.0	352.5	352.5	392.5	392.5	439.0	439.0
AD[1]	154.2	154.2	170.5	170.5	181.5	181.5	207.0	207.0	241.0	241.0	292.0	292.0	315.0	315.0	382.0	382.0
k	543.0	583.0	593.5	628.5	603.5	628.5	656.5	706.5	738.5	798.5	811.5	841.5	879.5	904.5	925.0	985.0
kB	613.0	653.0	672.0	707.0	676.5	701.5	761.0	811.0	854.5	914.5	940.5	970.5	1026.5	1051.5	1153.0	1213.0
LB	316.0	356.0	366.5	401.5	376.5	401.5	429.5	479.5	511.5	571.5	584.5	614.5	652.5	677.5	698.0	758.0
LBL	386.0	426.0	445.0	480.0	449.5	474.5	534.0	584.0	627.5	687.5	713.5	743.5	799.5	824.5	926.0	986.0

① ISO 4014 ② DIN 5480 ③ DIN 332-D ④ DIN 332 ⑤ Feather key/keyway DIN 6885-1 ⑦ ISO 4762 ⑧ Without locating shoulder +1 mm

1) AD depends on the motor options, for other dimensions, see page 9/46. * Spring compression at max. torque

2) FDAS/FZAS not possible

© Innomotics 2023

4

Gearbox FZ.Z./FD.Z.109 in a housing flange design

FZ030, FAZ030, FAZS030, FAZT030

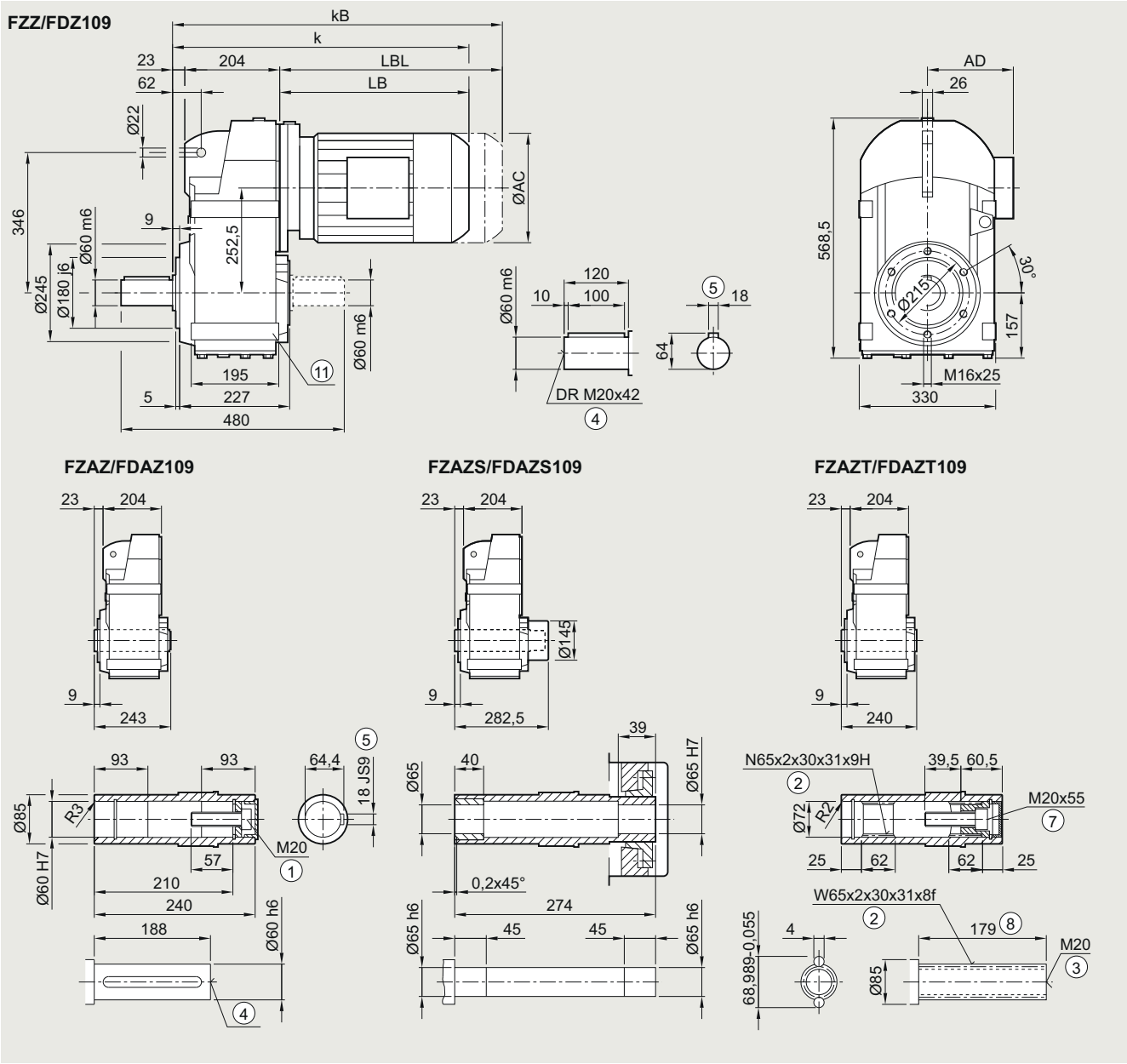

Motor	LE 90	90Z	100	100Z	112	112Z	132	132Z	160	160Z	LES 180	180Z	200	200Z	225[2]	225Y[2]
AC	173.8	173.8	198.0	198.0	222.0	222.0	264.0	264.0	318.0	318.0	352.5	352.5	392.5	392.5	439.0	439.0
AD[1]	154.2	154.2	170.5	170.5	181.5	181.5	207.0	207.0	241.0	241.0	292.0	292.0	315.0	315.0	382.0	382.0
k	543.0	583.0	593.5	628.5	603.5	628.5	656.5	706.5	738.5	798.5	811.5	841.5	879.5	904.5	925.0	985.0
kB	613.0	653.0	672.0	707.0	676.5	701.5	761.0	811.0	854.5	914.5	940.5	970.5	1026.5	1051.5	1153.0	1213.0
LB	316.0	356.0	366.5	401.5	376.5	401.5	429.5	479.5	511.5	571.5	584.5	614.5	652.5	677.5	698.0	758.0
LBL	386.0	426.0	445.0	480.0	449.5	474.5	534.0	584.0	627.5	687.5	713.5	743.5	799.5	824.5	926.0	986.0

① ISO 4014 ② DIN 5480 ③ DIN 332-D ④ DIN 332 ⑤ Feather key/keyway DIN 6885-1 ⑦ ISO 4762 ⑧ Without locating shoulder +1 mm
⑪ Use bores only for foot-mounted design
1) AD depends on the motor options, for other dimensions, see page 9/46.]
2) FDAS/FZAS not possible

© Innomotics 2023

Gearbox FZ.F./FD.F.109 in a flange-mounted design

FF030, FAF030, FAFS030, FAFT030

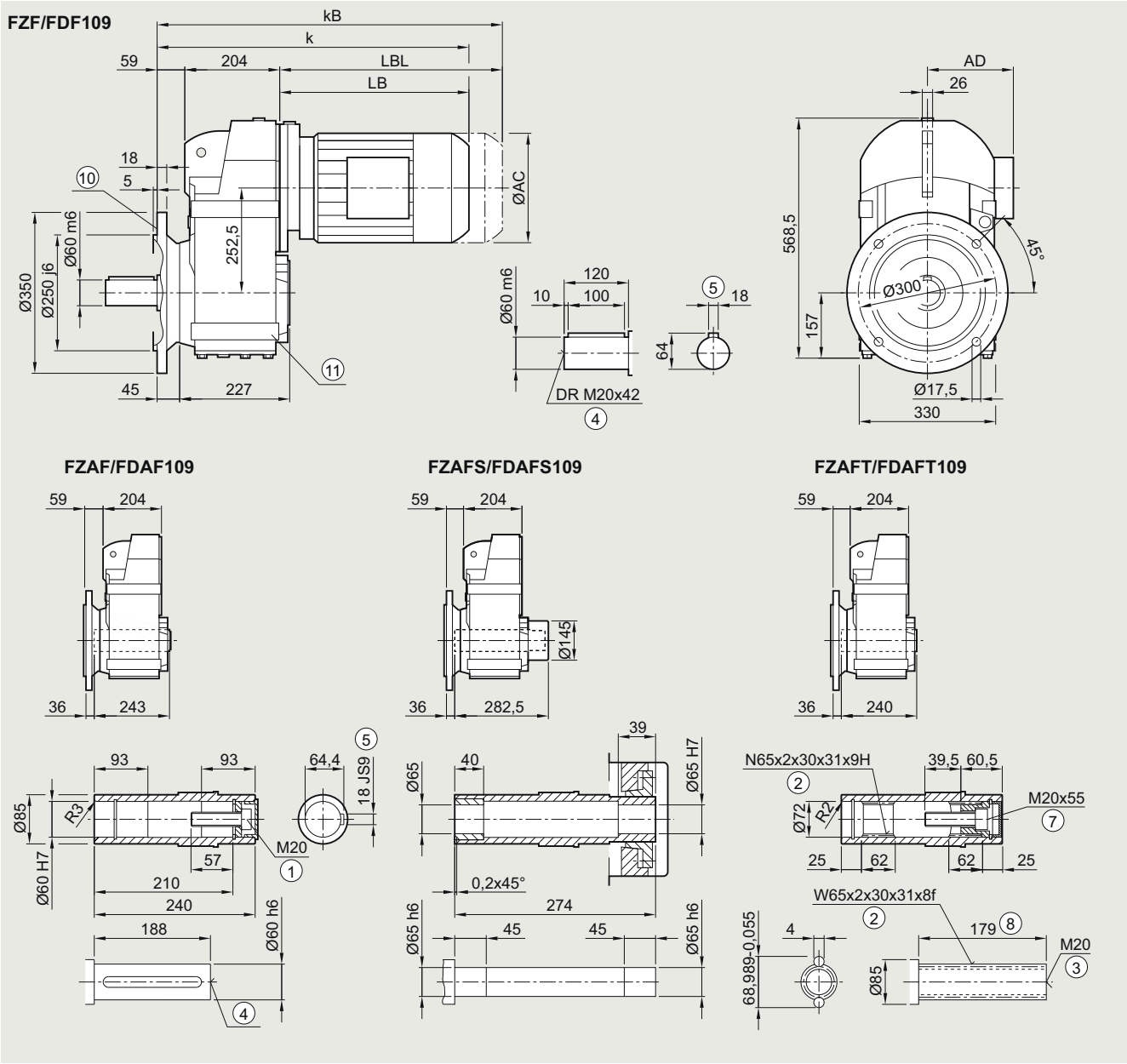

Motor	LE 90	90Z	100	100Z	112	112Z	132	132Z	160	160Z	LES 180	180Z	200	200Z	225[2]	225Y[2]
AC	173.8	173.8	198.0	198.0	222.0	222.0	264.0	264.0	318.0	318.0	352.5	352.5	392.5	392.5	439.0	439.0
AD[1]	154.2	154.2	170.5	170.5	181.5	181.5	207.0	207.0	241.0	241.0	292.0	292.0	315.0	315.0	382.0	382.0
k	579.0	619.0	629.5	664.5	639.5	664.5	692.5	742.5	774.5	834.5	847.5	877.5	915.5	940.5	961.0	1021.0
kB	649.0	689.0	708.0	743.0	712.5	737.5	797.0	847.0	890.5	950.5	976.5	1006.5	1062.5	1087.5	1189.0	1249.0
LB	316.0	356.0	366.5	401.5	376.5	401.5	429.5	479.5	511.5	571.5	584.5	614.5	652.5	677.5	698.0	758.0
LBL	386.0	426.0	445.0	480.0	449.5	474.5	534.0	584.0	627.5	687.5	713.5	743.5	799.5	824.5	926.0	986.0

① ISO 4014 ② DIN 5480 ③ DIN 332-D ④ DIN 332 ⑤ Feather key/keyway DIN 6885-1 ⑦ ISO 4762 ⑧ Without locating shoulder +1 mm
⑩ For inner contour, see page 4/124 ⑪ Use bores only for foot-mounted design
[1] AD depends on the motor options, for other dimensions, see page 9/46. [2] FDAS/FZAS not possible

© Innomotics 2023

Gearbox FZ.F./FD.F.109 in a flange-mounted design with VLplus reinforced bearing system (G30)

FF040, FAF040

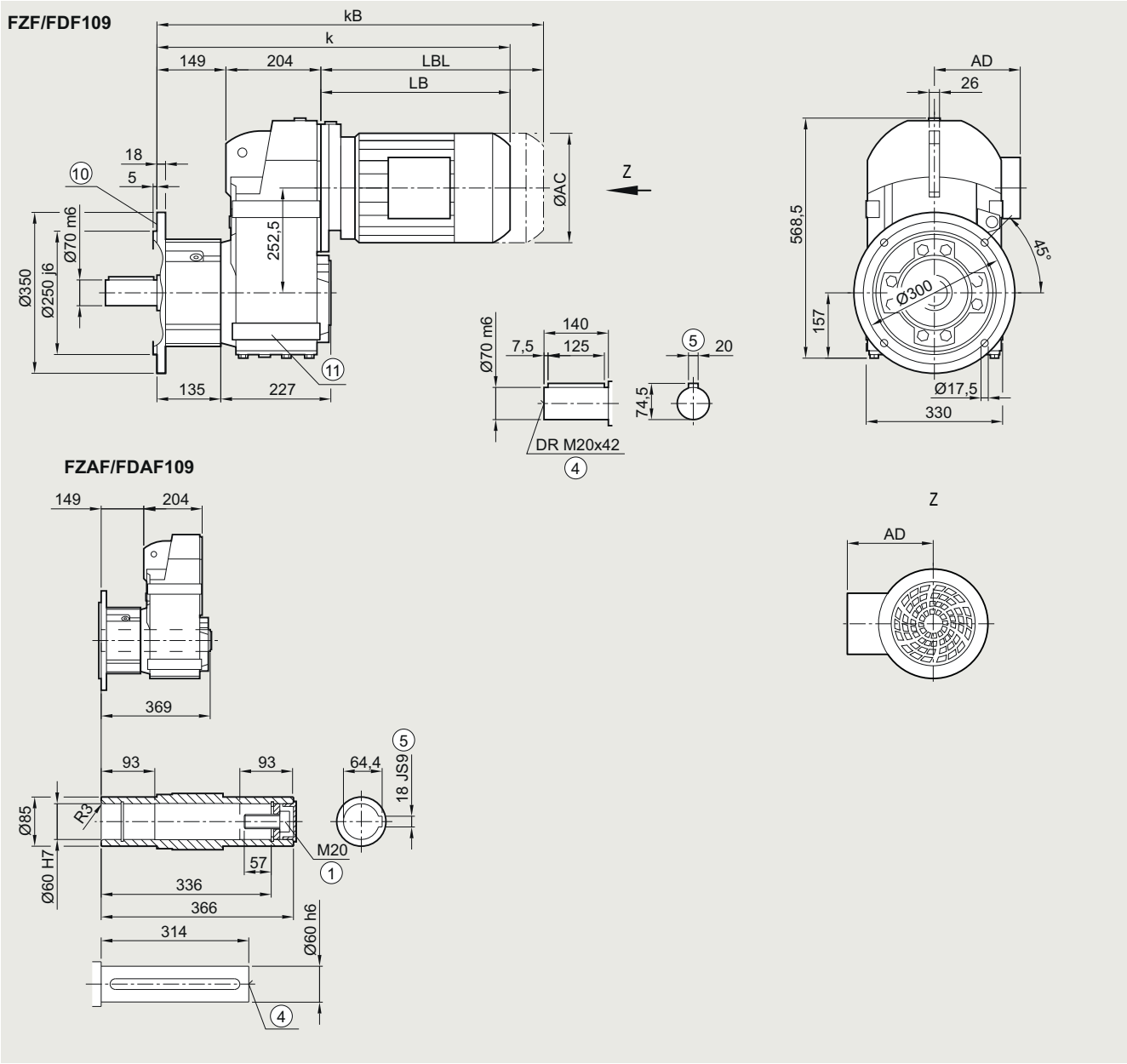

Motor	LE 90	90Z	100	100Z	112	112Z	132	132Z	160	160Z	LES 180	180Z	200	200Z	225	225Y
AC	173.8	173.8	198.0	198.0	222.0	222.0	264.0	264.0	318.0	318.0	352.5	352.5	392.5	392.5	439.0	439.0
AD[1)]	154.2	154.2	170.5	170.5	181.5	181.5	207.0	207.0	241.0	241.0	292.0	292.0	315.0	315.0	382.0	382.0
k	669.0	709.0	719.5	754.5	729.5	754.5	782.5	832.5	864.5	924.5	937.5	967.5	1005.5	1030.5	1051.0	1111.0
kB	739.0	779.0	798.0	833.0	802.5	827.5	887.0	937.0	980.5	1040.5	1066.5	1096.5	1152.5	1177.5	1279.0	1339.0
LB	316.0	356.0	366.5	401.5	376.5	401.5	429.5	479.5	511.5	571.5	584.5	614.5	652.5	677.5	698.0	758.0
LBL	386.0	426.0	445.0	480.0	449.5	474.5	534.0	584.0	627.5	687.5	713.5	743.5	799.5	824.5	926.0	986.0

① ISO 4014 ④ DIN 332 ⑤ Feather key/keyway DIN 6885-1 ⑪ Use bores only for foot-mounted design
⑩ For inner contour, see page 4/124 1) AD depends on the motor options, for other dimensions, see page 9/46.

© Innomotics 2023

Gearbox FD. /FZ.109 in a foot-mounted design

F030, FA030, FAS030, FAT030

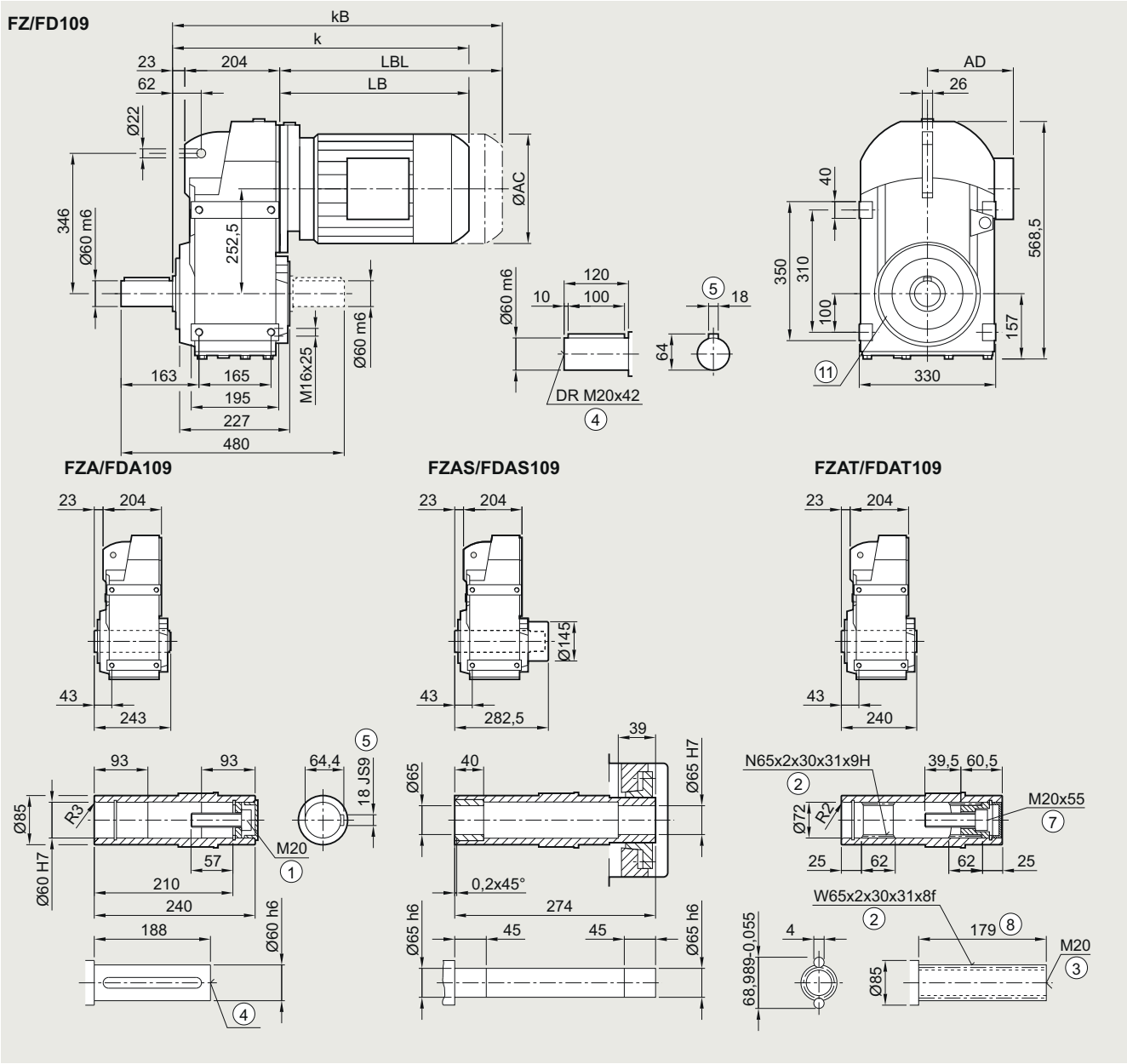

Motor	LE 90	90Z	100	100Z	112	112Z	132	132Z	160	160Z	LES 180	180Z	200	200Z	225[2]	225Y[2]
AC	173.8	173.8	198.0	198.0	222.0	222.0	264.0	264.0	318.0	318.0	352.5	352.5	392.5	392.5	439.0	439.0
AD[1]	154.2	154.2	170.5	170.5	181.5	181.5	207.0	207.0	241.0	241.0	292.0	292.0	315.0	315.0	382.0	382.0
k	543.0	583.0	593.5	628.5	603.5	628.5	656.5	706.5	738.5	798.5	811.5	841.5	879.5	904.5	925.0	985.0
kB	613.0	653.0	672.0	707.0	676.5	701.5	761.0	811.0	854.5	914.5	940.5	970.5	1026.5	1051.5	1153.0	1213.0
LB	316.0	356.0	366.5	401.5	376.5	401.5	429.5	479.5	511.5	571.5	584.5	614.5	652.5	677.5	698.0	758.0
LBL	386.0	426.0	445.0	480.0	449.5	474.5	534.0	584.0	627.5	687.5	713.5	743.5	799.5	824.5	926.0	986.0

① ISO 4014 ② DIN 5480 ③ DIN 332-D ④ DIN 332 ⑤ Feather key/keyway DIN 6885-1 ⑦ ISO 4762 ⑧ Without locating shoulder +1 mm
⑪ Use bores only for housing flange design
[1] AD depends on the motor options, for other dimensions, see page 9/46.
[2] FDAS/FZAS not possible

© Innomotics 2023

4

Gearbox FZAD./FDAD.129 in a shaft-mounted design

FAD030, FADS030, FADT030

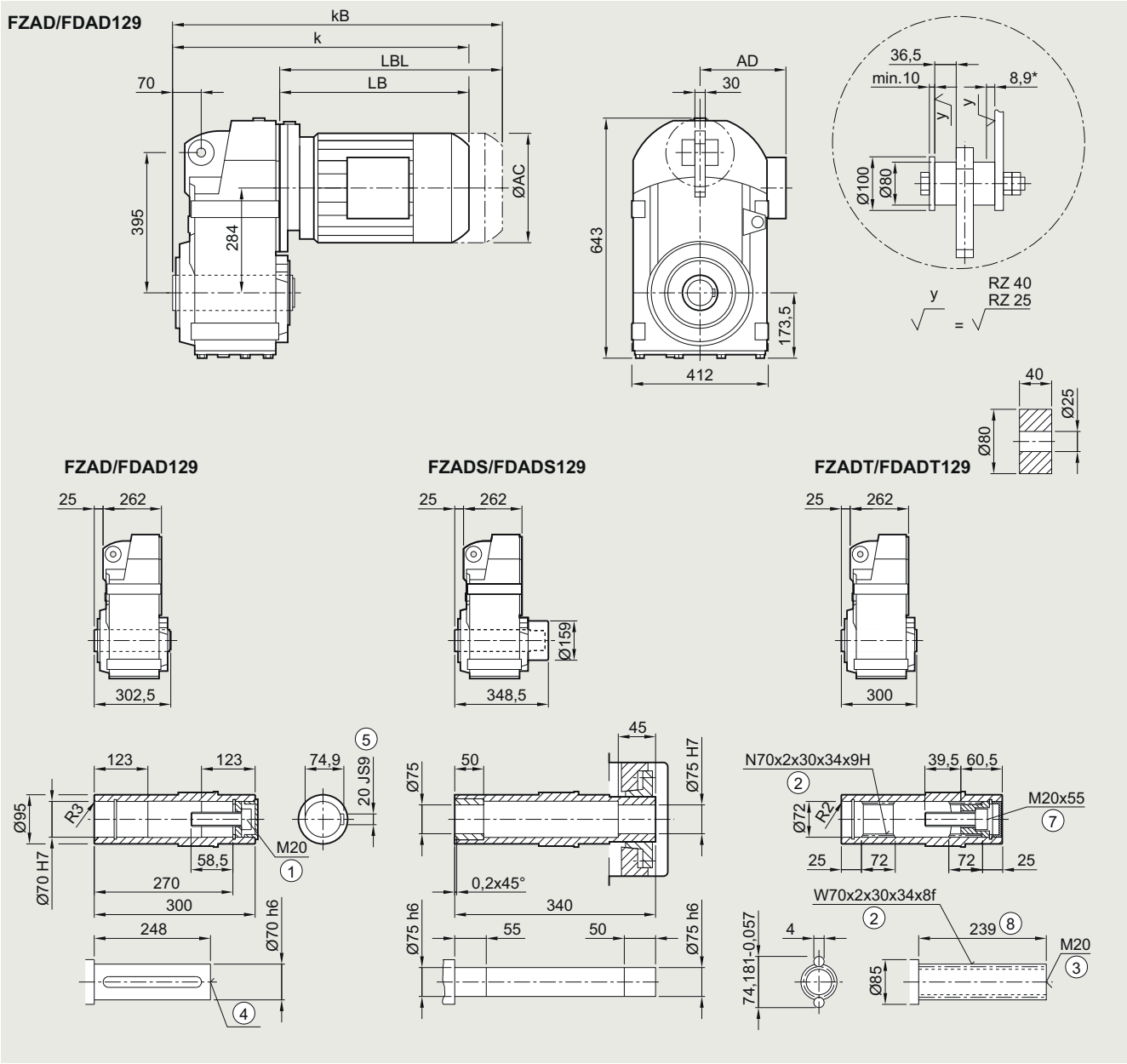

Motor	LE 90	90Z	100	100Z	112	112Z	132	132Z	160	160Z	LES 180	180Z	200	200Z	225	225Y	250[2]
AC	173.8	173.8	198.0	198.0	222.0	222.0	264.0	264.0	318.0	318.0	352.5	352.5	392.5	392.5	439.0	439.0	487.0
AD[1]	154.2	154.2	170.5	170.5	181.5	181.5	207.0	207.0	241.0	241.0	292.0	292.0	315.0	315.0	382.0	382.0	457.5
k	596.0	636.0	644.5	679.5	654.5	679.5	705.5	755.5	787.5	847.5	860.5	890.5	928.5	953.5	974.0	1034.0	1085.5
kB	666.0	706.0	723.0	758.0	727.5	752.5	810.0	860.0	903.5	963.5	989.5	1019.5	1075.5	1100.5	1202.0	1262.0	1310.5
LB	309.0	349.0	357.5	392.5	367.5	392.5	418.5	468.5	500.5	560.5	573.5	603.5	641.5	666.5	687.0	747.0	798.5
LBL	379.0	419.0	436.0	471.0	440.5	465.5	523.0	573.0	616.5	676.5	702.5	732.5	788.5	813.5	915.0	975.0	1023.5

① ISO 4014 ② DIN 5480 ③ DIN 332-D ④ DIN 332 ⑤ Feather key/keyway DIN 6885-1 ⑦ ISO 4762 ⑧ Without locating shoulder +1 mm

1) AD depends on the motor options, for other dimensions, see page 9/46. * Spring compression at max. torque

2) FDAS/FZAS not possible

© Innomotics 2023

Gearbox FZ.Z./FD.Z.129 in a housing flange design

FZ030, FAZ030, FAZS030, FAZT030

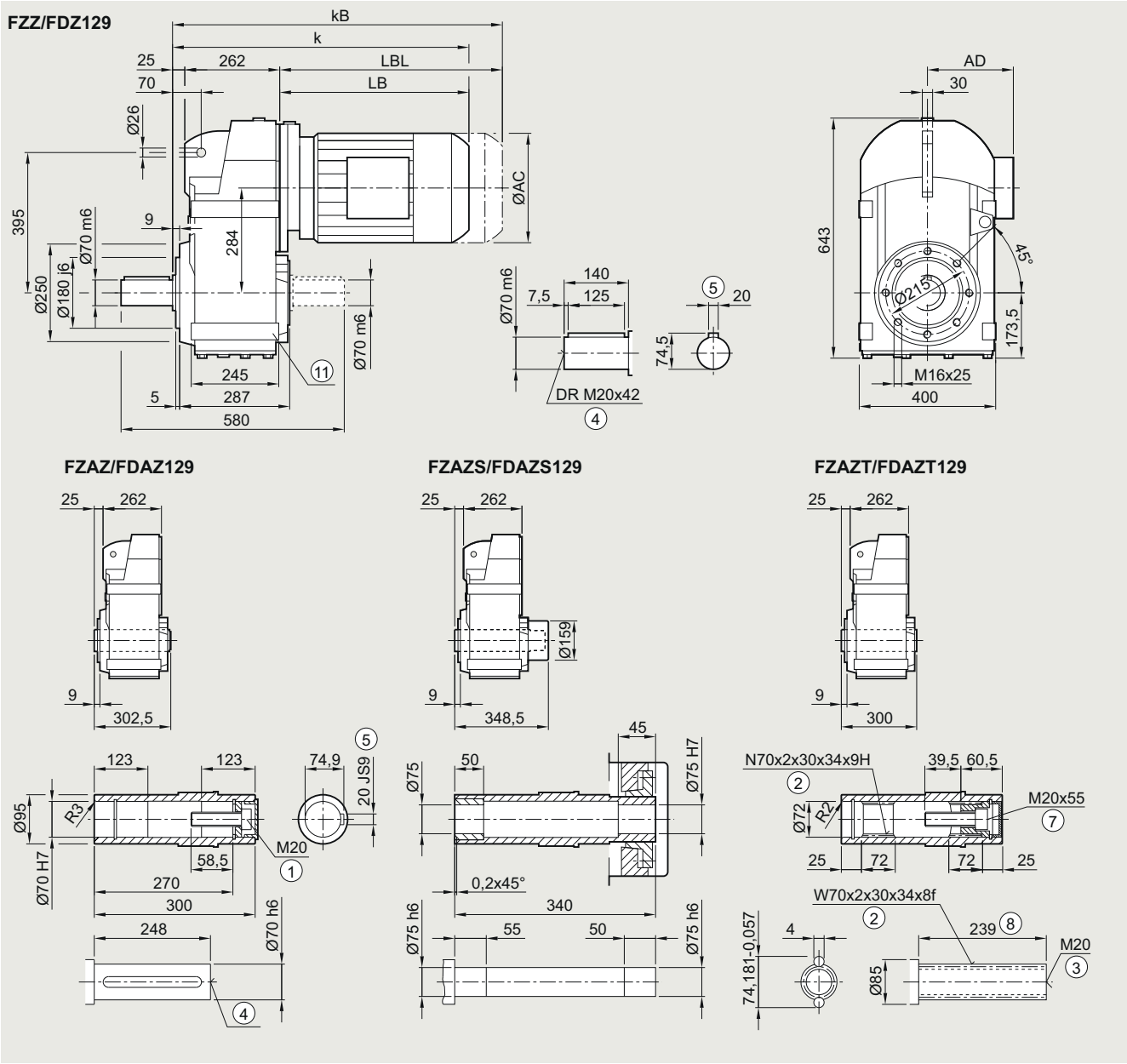

Motor	LE 90	90Z	100	100Z	112	112Z	132	132Z	160	160Z	LES 180	180Z	200	200Z	225	225Y	250[2]
AC	173.8	173.8	198.0	198.0	222.0	222.0	264.0	264.0	318.0	318.0	352.5	352.5	392.5	392.5	439.0	439.0	487.0
AD[1]	154.2	154.2	170.5	170.5	181.5	181.5	207.0	207.0	241.0	241.0	292.0	292.0	315.0	315.0	382.0	382.0	457.5
k	596.0	636.0	644.5	679.5	654.5	679.5	705.5	755.5	787.5	847.5	860.5	890.5	928.5	953.5	974.0	1034.0	1085.5
kB	666.0	706.0	723.0	758.0	727.5	752.5	810.0	860.0	903.5	963.5	989.5	1019.5	1075.5	1100.5	1202.0	1262.0	1310.5
LB	309.0	349.0	357.5	392.5	367.5	392.5	418.5	468.5	500.5	560.5	573.5	603.5	641.5	666.5	687.0	747.0	798.5
LBL	379.0	419.0	436.0	471.0	440.5	465.5	523.0	573.0	616.5	676.5	702.5	732.5	788.5	813.5	915.0	975.0	1023.5

① ISO 4014 ② DIN 5480 ③ DIN 332-D ④ DIN 332 ⑤ Feather key/keyway DIN 6885-1 ⑦ ISO 4762 ⑧ Without locating shoulder +1 mm
⑪ Use bores only for foot-mounted design
1) AD depends on the motor options, for other dimensions, see page 9/46. 2) FDAS/FZAS not possible

© Innomotics 2023

Gearbox FZ.F./FD.F.129 in a flange-mounted design

FF030, FAF030, FAFS030, FAFT030

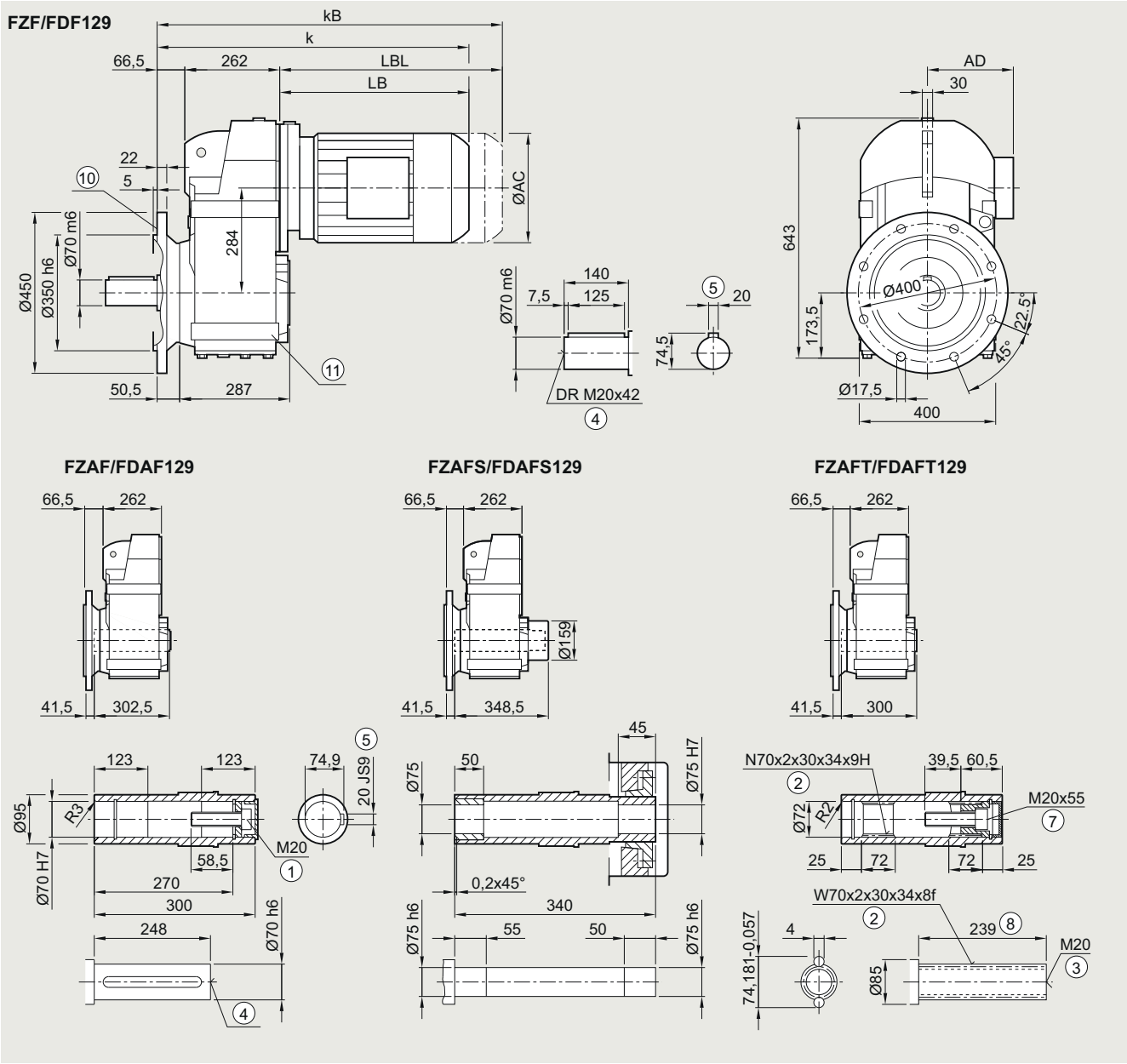

Motor	LE 90	90Z	100	100Z	112	112Z	132	132Z	160	160Z	LES 180	180Z	200	200Z	225	225Y	250[2]
AC	173.8	173.8	198.0	198.0	222.0	222.0	264.0	264.0	318.0	318.0	352.5	352.5	392.5	392.5	439.0	439.0	487.0
AD[1]	154.2	154.2	170.5	170.5	181.5	181.5	207.0	207.0	241.0	241.0	292.0	292.0	315.0	315.0	382.0	382.0	457.5
k	637.5	677.5	686.0	721.0	696.0	721.0	747.0	797.0	829.0	889.0	902.0	932.0	970.0	995.0	1015.0	1075.0	1127.0
kB	707.5	747.5	764.5	799.5	769.0	794.0	851.5	901.5	945.0	1005.0	1031.0	1061.0	1117.0	1142.0	1243.5	1303.5	1352.0
LB	309.0	349.0	357.5	392.5	367.5	392.5	418.5	468.5	500.5	560.5	573.5	603.5	641.5	666.5	687.0	747.0	798.5
LBL	379.0	419.0	436.0	471.0	440.5	465.5	523.0	573.0	616.5	676.5	702.5	732.5	788.5	813.5	915.0	975.0	1023.5

① ISO 4014 ② DIN 5480 ③ DIN 332-D ④ DIN 332 ⑤ Feather key/keyway DIN 6885-1 ⑦ ISO 4762 ⑧ Without locating shoulder +1 mm
⑩ For inner contour, see page 4/124 ⑪ Use bores only for foot-mounted design
[1] AD depends on the motor options, for other dimensions, see page 9/46. [2] FDAS/FZAS not possible

© Innomotics 2023

Gearbox FZ.F./FD.F.129 in a flange-mounted design with VLplus reinforced bearing system (G30)

FF040, FAF040

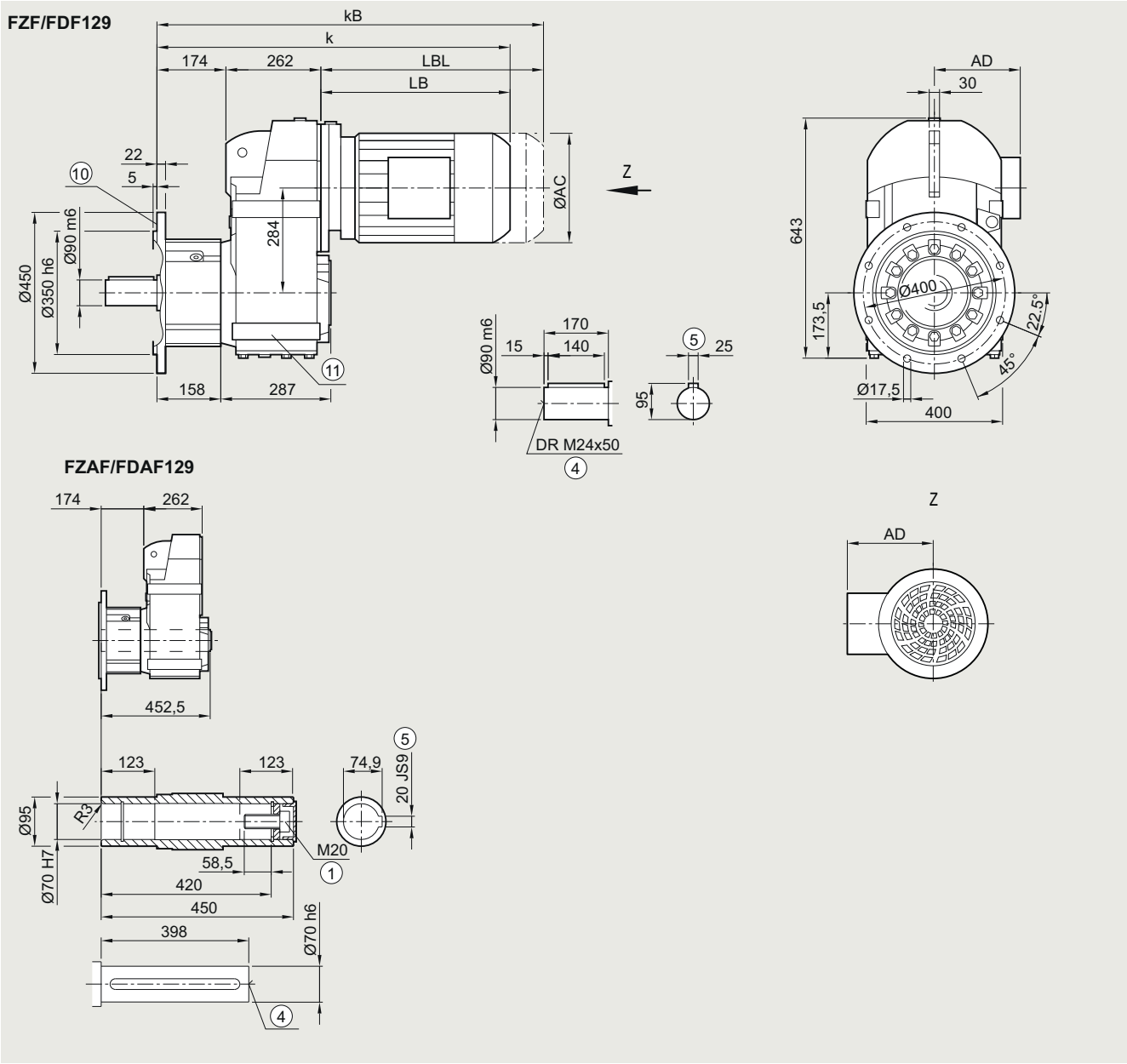

Motor	LE 90	90Z	100	100Z	112	112Z	132	132Z	160	160Z	LES 180	180Z	200	200Z	225	225Y	250
AC	173.8	173.8	198.0	198.0	222.0	222.0	264.0	264.0	318.0	318.0	352.5	352.5	392.5	392.5	439.0	439.0	487.0
AD[1)]	154.2	154.2	170.5	170.5	181.5	181.5	207.0	207.0	241.0	241.0	292.0	292.0	315.0	315.0	382.0	382.0	457.5
k	745.0	751.0	793.5	828.5	803.5	828.5	854.5	904.5	936.5	996.5	1009.5	1039.5	1077.5	1102.5	1123.0	1183.0	1234.5
kB	815.0	855.0	872.0	907.0	876.5	901.5	959.0	1009.0	1052.5	1112.5	1138.5	1168.5	1224.5	1249.5	1351.0	1411.0	1459.5
LB	309.0	349.0	357.5	392.5	367.5	392.5	418.5	468.5	500.5	560.5	573.5	603.5	641.5	666.5	687.0	747.0	798.5
LBL	379.0	419.0	436.0	471.0	440.5	465.5	523.0	573.0	616.5	676.5	702.5	732.5	788.5	813.5	915.0	975.0	1023.5

① ISO 4014 ④ DIN 332 ⑤ Feather key/keyway DIN 6885-1 ⑪ Use bores only for foot-mounted design
⑩ For inner contour, see page 4/124 [1)] AD depends on the motor options, for other dimensions, see page 9/46.

© Innomotics 2023

Gearbox FZ../FD..129 in a foot-mounted design

F030, FA030, FAS030, FAT030

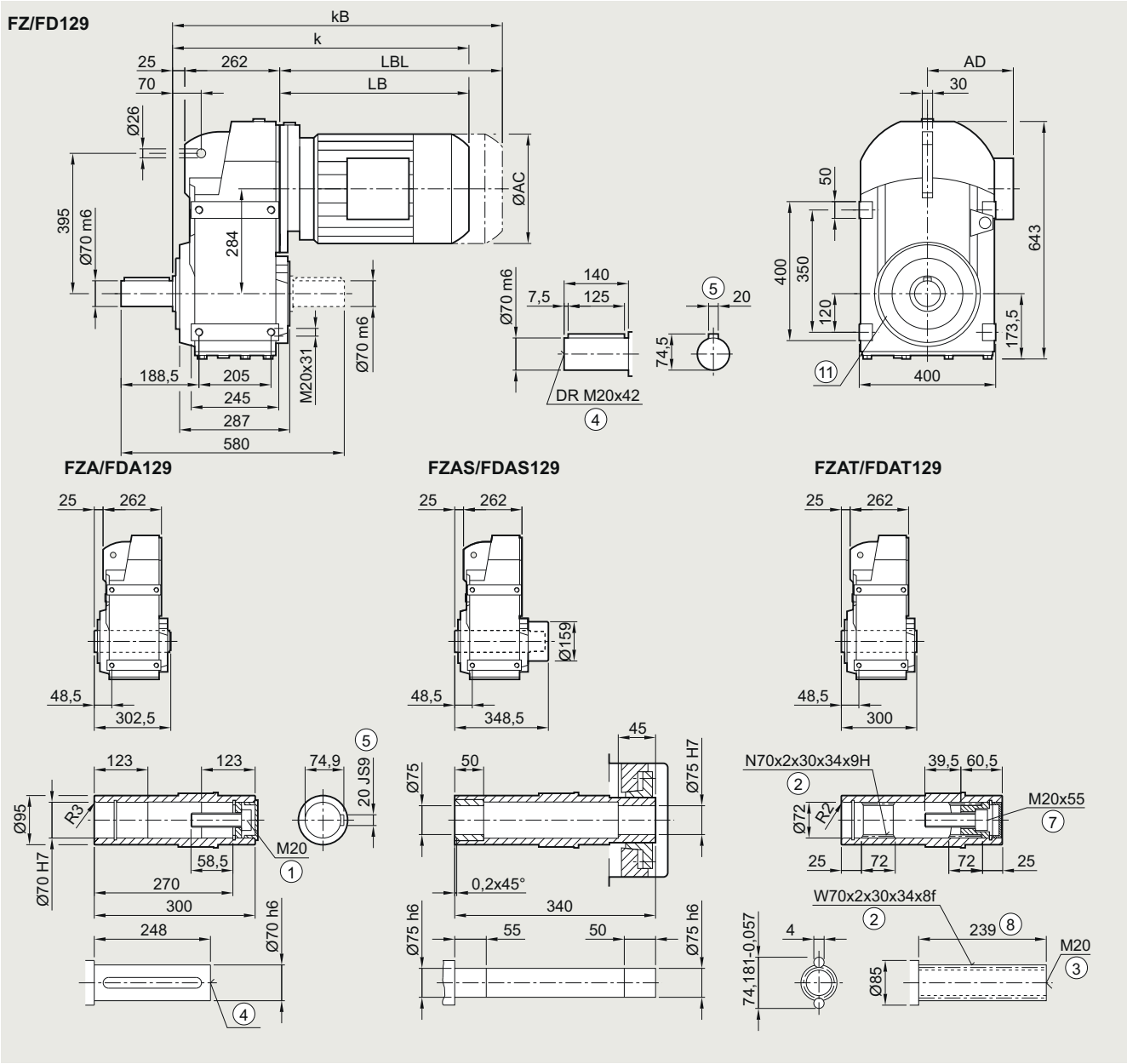

Motor	LE 90	90Z	100	100Z	112	112Z	132	132Z	160	160Z	LES 180	180Z	200	200Z	225	225Y	250[2]
AC	173.8	173.8	198.0	198.0	222.0	222.0	264.0	264.0	318.0	318.0	352.5	352.5	392.5	392.5	439.0	439.0	487.0
AD[1]	154.2	154.2	170.5	170.5	181.5	181.5	207.0	207.0	241.0	241.0	292.0	292.0	315.0	315.0	382.0	382.0	457.5
k	596.0	636.0	644.5	679.5	654.5	679.5	705.5	755.5	787.5	847.5	860.5	890.5	928.5	953.5	974.0	1034.0	1085.5
kB	666.0	706.0	723.0	758.0	727.5	752.5	810.0	860.0	903.5	963.5	989.5	1019.5	1075.5	1100.5	1202.0	1262.0	1310.5
LB	309.0	349.0	357.5	392.5	367.5	392.5	418.5	468.5	500.5	560.5	573.5	603.5	641.5	666.5	687.0	747.0	798.5
LBL	379.0	419.0	436.0	471.0	440.5	465.5	523.0	573.0	616.5	676.5	702.5	732.5	788.5	813.5	915.0	975.0	1023.5

① ISO 4014 ② DIN 5480 ③ DIN 332-D ④ DIN 332 ⑤ Feather key/keyway DIN 6885-1 ⑦ ISO 4762 ⑧ Without locating shoulder +1 mm
⑪ Use bores only for housing flange design
[1] AD depends on the motor options, for other dimensions, see page 9/46.
[2] FDAS/FZAS not possible

© Innomotics 2023

Gearbox FZAD./FDAD.149 in a shaft-mounted design

FAD030, FADS030, FADT030

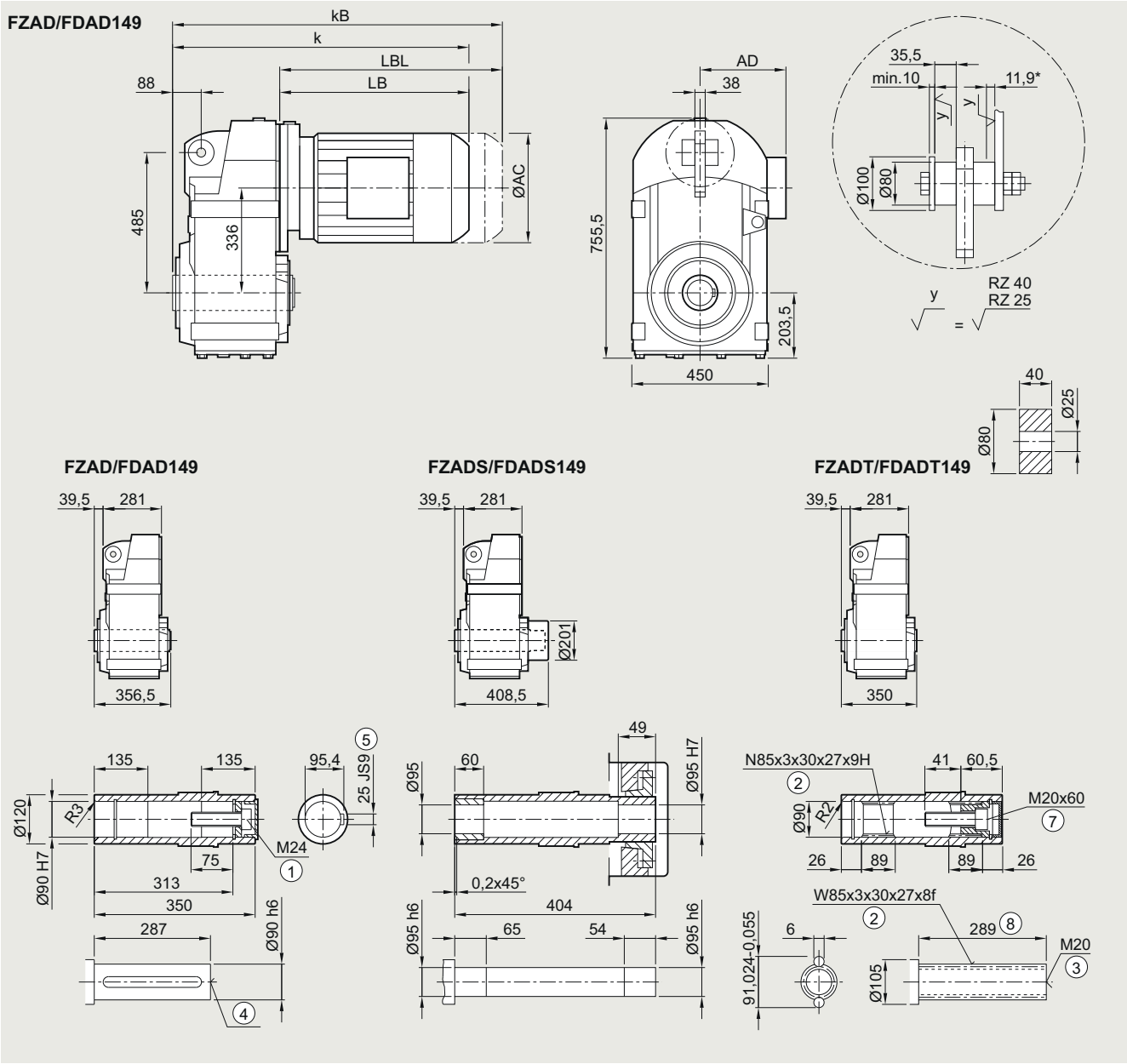

Motor	LE 100	100Z	112	112Z	132	132Z	160	160Z	LES 180	180Z	200	200Z	225	225Y	250
AC	198.0	198.0	222.0	222.0	264.0	264.0	318.0	318.0	352.5	352.5	392.5	392.5	439.0	439.0	487.0
AD[1)]	170.5	170.5	181.5	181.5	207.0	207.0	241.0	241.0	292.0	292.0	315.0	315.0	382.0	382.0	457.5
k	676.5	711.5	686.5	711.5	732.5	782.5	814.5	874.5	887.5	917.5	955.5	980.5	1000.5	1060.5	1112.0
kB	755.0	790.0	759.5	784.5	837.0	887.0	930.5	990.5	1016.5	1046.5	1102.5	1127.5	1229.0	1289.0	1337.0
LB	356.0	391.0	366.0	391.0	412.0	462.0	494.0	554.0	567.0	597.0	635.0	660.0	680.5	740.5	792.0
LBL	434.5	469.5	439.0	464.0	516.5	566.5	610.0	670.0	696.0	726.0	782.0	807.0	908.5	968.5	1017.0

① ISO 4014 ② DIN 5480 ③ DIN 332-D ④ DIN 332 ⑤ Feather key/keyway DIN 6885-1 ⑦ ISO 4762 ⑧ Without locating shoulder +1 mm

1) AD depends on the motor options, for other dimensions, see page 9/46.] * Spring compression at max. torque

© Innomotics 2023

4

Gearbox FZ.Z./FD.Z.149 in a housing flange design

FZ030, FAZ030, FAZS030, FAZT030

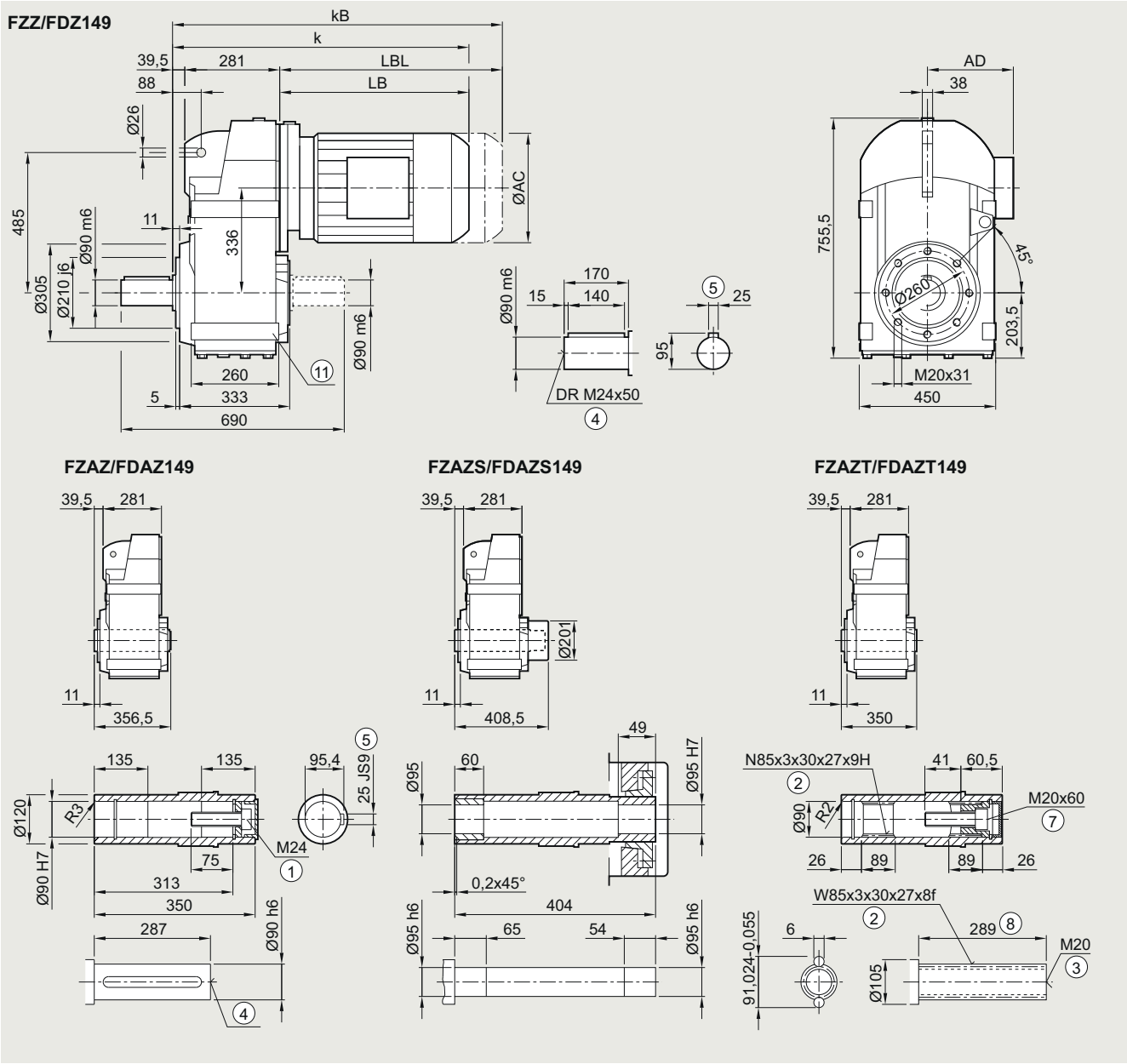

Motor	LE 100	100Z	112	112Z	132	132Z	160	160Z	LES 180	180Z	200	200Z	225	225Y	250
AC	198.0	198.0	222.0	222.0	264.0	264.0	318.0	318.0	352.5	352.5	392.5	392.5	439.0	439.0	487.0
AD[1)]	170.5	170.5	181.5	181.5	207.0	207.0	241.0	241.0	292.0	292.0	315.0	315.0	382.0	382.0	457.5
k	676.5	711.5	686.5	711.5	732.5	782.5	814.5	874.5	887.5	917.5	955.5	980.5	1000.5	1060.5	1112.0
kB	755.0	790.0	759.5	784.5	837.0	887.0	930.5	990.5	1016.5	1046.5	1102.5	1127.5	1229.0	1289.0	1337.0
LB	356.0	391.0	366.0	391.0	412.0	462.0	494.0	554.0	567.0	597.0	635.0	660.0	680.5	740.5	792.0
LBL	434.5	469.5	439.0	464.0	516.5	566.5	610.0	670.0	696.0	726.0	782.0	807.0	908.5	968.5	1017.0

① ISO 4014 ② DIN 5480 ③ DIN 332-D ④ DIN 332 ⑤ Feather key/keyway DIN 6885-1 ⑦ ISO 4762 ⑧ Without locating shoulder +1 mm
⑪ Use bores only for foot-mounted design
1) AD depends on the motor options, for other dimensions, see page 9/46.

© Innomotics 2023

Gearbox FZ.F./FD.F.149 in a flange-mounted design

FF030, FAF030, FAFS030, FAFT030

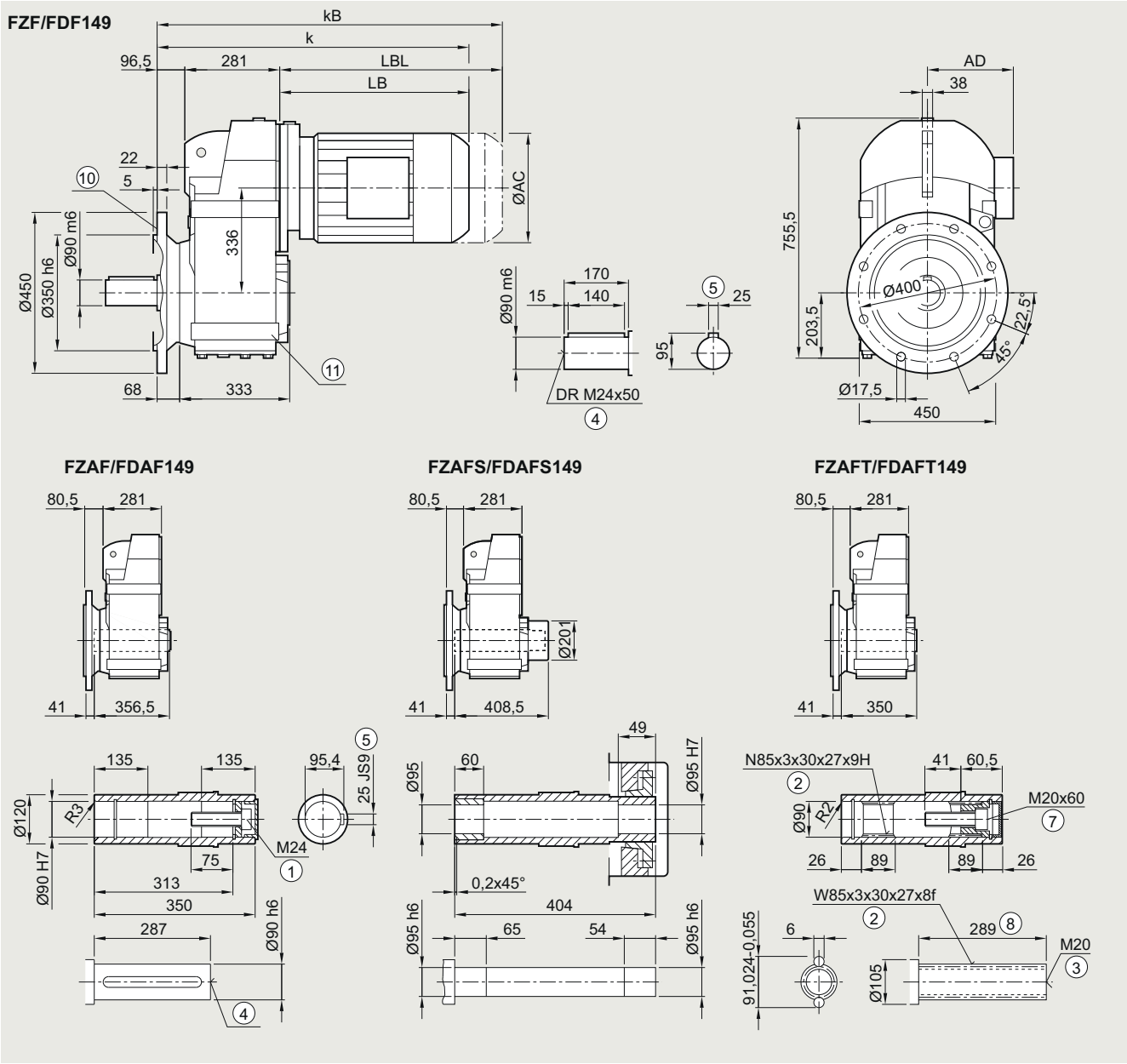

Motor	LE 100	100Z	112	112Z	132	132Z	160	160Z	LES 180	180Z	200	200Z	225	225Y	250
AC	198.0	198.0	222.0	222.0	264.0	264.0	318.0	318.0	352.5	352.5	392.5	392.5	439.0	439.0	487.0
AD[1)]	170.5	170.5	181.5	181.5	207.0	207.0	241.0	241.0	292.0	292.0	315.0	315.0	382.0	382.0	457.5
k	734.0	769.0	744.0	769.0	790.0	840.0	872.0	932.0	945.0	975.0	1013.0	1038.0	1058.5	1118.5	1170.0
kB	812.5	847.5	817.0	842.0	894.5	944.5	988.0	1048.0	1074.0	1104.0	1160.0	1185.0	1286.5	1346.5	1395.0
LB	356.0	391.0	366.0	391.0	412.0	462.0	494.0	554.0	567.0	597.0	635.0	660.0	680.5	740.5	792.0
LBL	434.5	469.5	439.0	464.0	516.5	566.5	610.0	670.0	696.0	726.0	782.0	807.0	908.5	968.5	1017.0

① ISO 4014 ② DIN 5480 ③ DIN 332-D ④ DIN 332 ⑤ Feather key/keyway DIN 6885-1 ⑦ ISO 4762 ⑧ Without locating shoulder +1 mm
⑩ For inner contour, see page 4/124 ⑪ Use bores only for foot-mounted design
1) AD depends on the motor options, for other dimensions, see page 9/46.

© Innomotics 2023

Gearbox FZ.F./FD.F.149 in a flange-mounted design with VLplus reinforced bearing system (G30)

FF040, FAF040

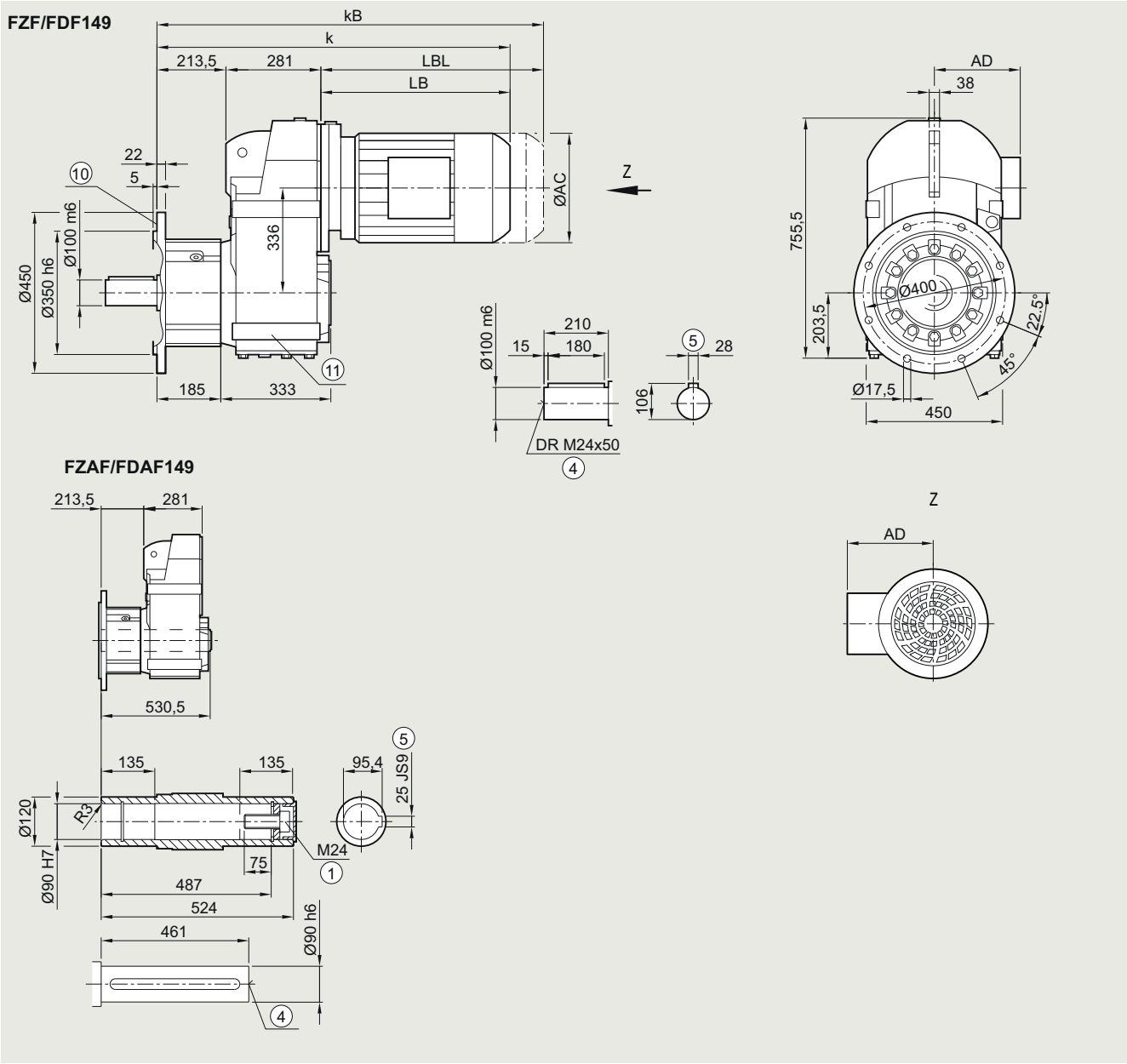

Motor	LE 100	100Z	112	112Z	132	132Z	160	160Z	LES 180	180Z	200	200Z	225	225Y	250
AC	198.0	198.0	222.0	222.0	264.0	264.0	318.0	318.0	352.5	352.5	392.5	392.5	439.0	439.0	487.0
AD[1)]	170.5	170.5	181.5	181.5	207.0	207.0	241.0	241.0	292.0	292.0	315.0	315.0	382.0	382.0	457.5
k	851.0	886.0	861.0	886.0	907.0	957.0	989.0	1049.0	1062.0	1092.0	1130.0	1155.0	1175.5	1235.5	1287.0
kB	929.5	964.5	934.0	959.0	1011.5	1061.5	1105.0	1165.0	1191.0	1221.0	1277.0	1302.0	1403.5	1463.5	1512.0
LB	356.0	391.0	366.0	391.0	412.0	462.0	494.0	554.0	567.0	597.0	635.0	660.0	680.5	740.5	792.0
LBL	434.5	469.5	439.0	464.0	516.5	566.5	610.0	670.0	696.0	726.0	782.0	807.0	908.5	968.5	1017.0

① ISO 4014 ④ DIN 332 ⑤ Feather key/keyway DIN 6885-1 ⑪ Use bores only for foot-mounted design
⑩ For inner contour, see page 4/124 1) AD depends on the motor options, for other dimensions, see page 9/46.

© Innomotics 2023

Gearbox FZ../FD..149 in a foot-mounted design

F030, FA030, FAS030, FAT030

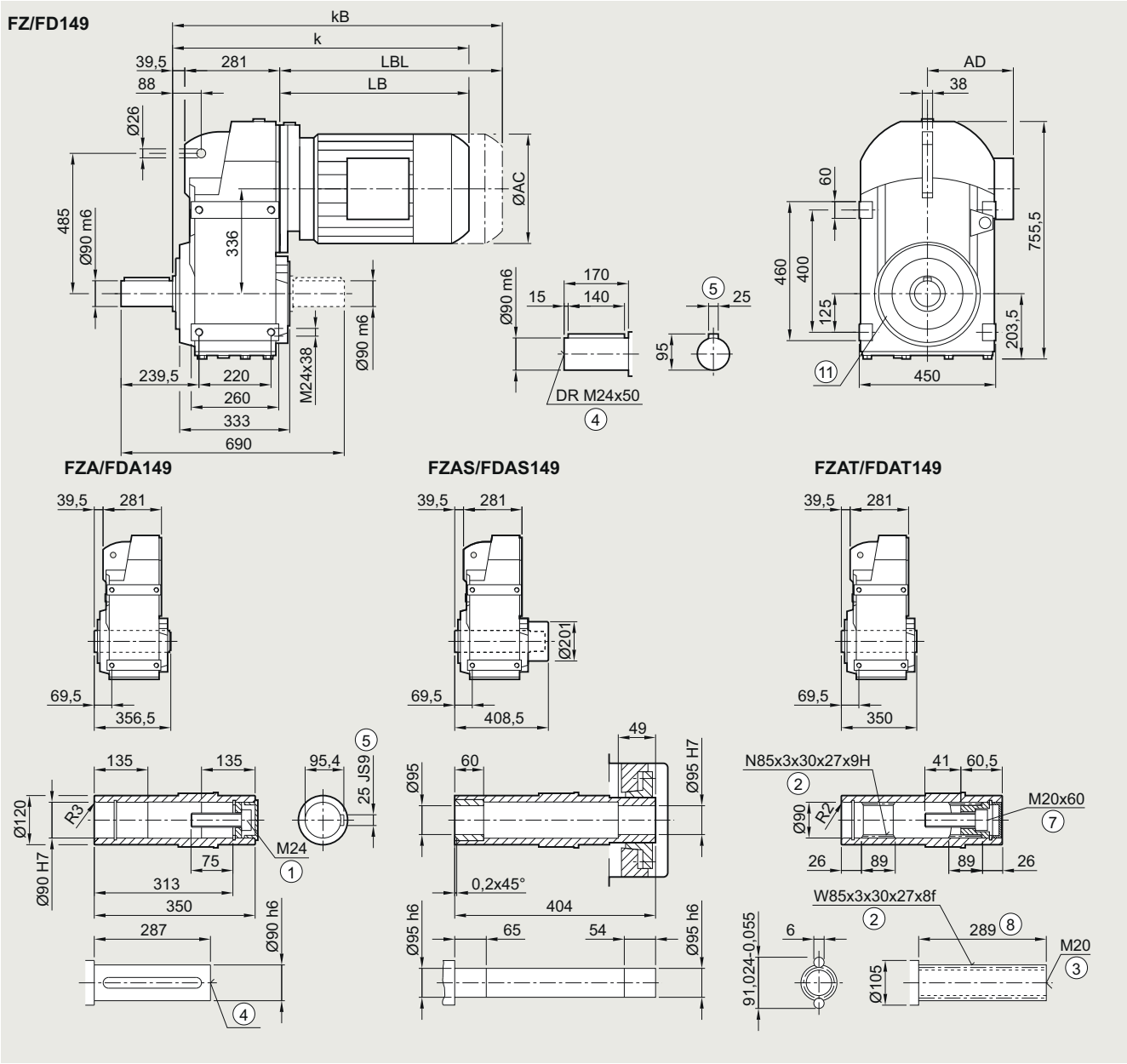

Motor	LE 100	100Z	112	112Z	132	132Z	160	160Z	LES 180	180Z	200	200Z	225	225Y	250
AC	198.0	198.0	222.0	222.0	264.0	264.0	318.0	318.0	352.5	352.5	392.5	392.5	439.0	439.0	487.0
AD[1)]	170.5	170.5	181.5	181.5	207.0	207.0	241.0	241.0	292.0	292.0	315.0	315.0	382.0	382.0	457.5
k	676.5	711.5	686.5	711.5	732.5	782.5	814.5	874.5	887.5	917.5	955.5	980.5	1000.5	1060.5	1112.0
kB	755.0	790.0	759.5	784.5	837.0	887.0	930.5	990.5	1016.5	1046.5	1102.5	1127.5	1229.0	1289.0	1337.0
LB	356.0	391.0	366.0	391.0	412.0	462.0	494.0	554.0	567.0	597.0	635.0	660.0	680.5	740.5	792.0
LBL	434.5	469.5	439.0	464.0	516.5	566.5	610.0	670.0	696.0	726.0	782.0	807.0	908.5	968.5	1017.0

① ISO 4014 ② DIN 5480 ③ DIN 332-D ④ DIN 332 ⑤ Feather key/keyway DIN 6885-1 ⑦ ISO 4762 ⑧ Without locating shoulder +1 mm
⑪ Use bores only for housing flange design
1) AD depends on the motor options, for other dimensions, see page 9/46.

© Innomotics 2023

Gearbox FZAD./FDAD.169 in a shaft-mounted design

FAD030, FADS030, FADT030

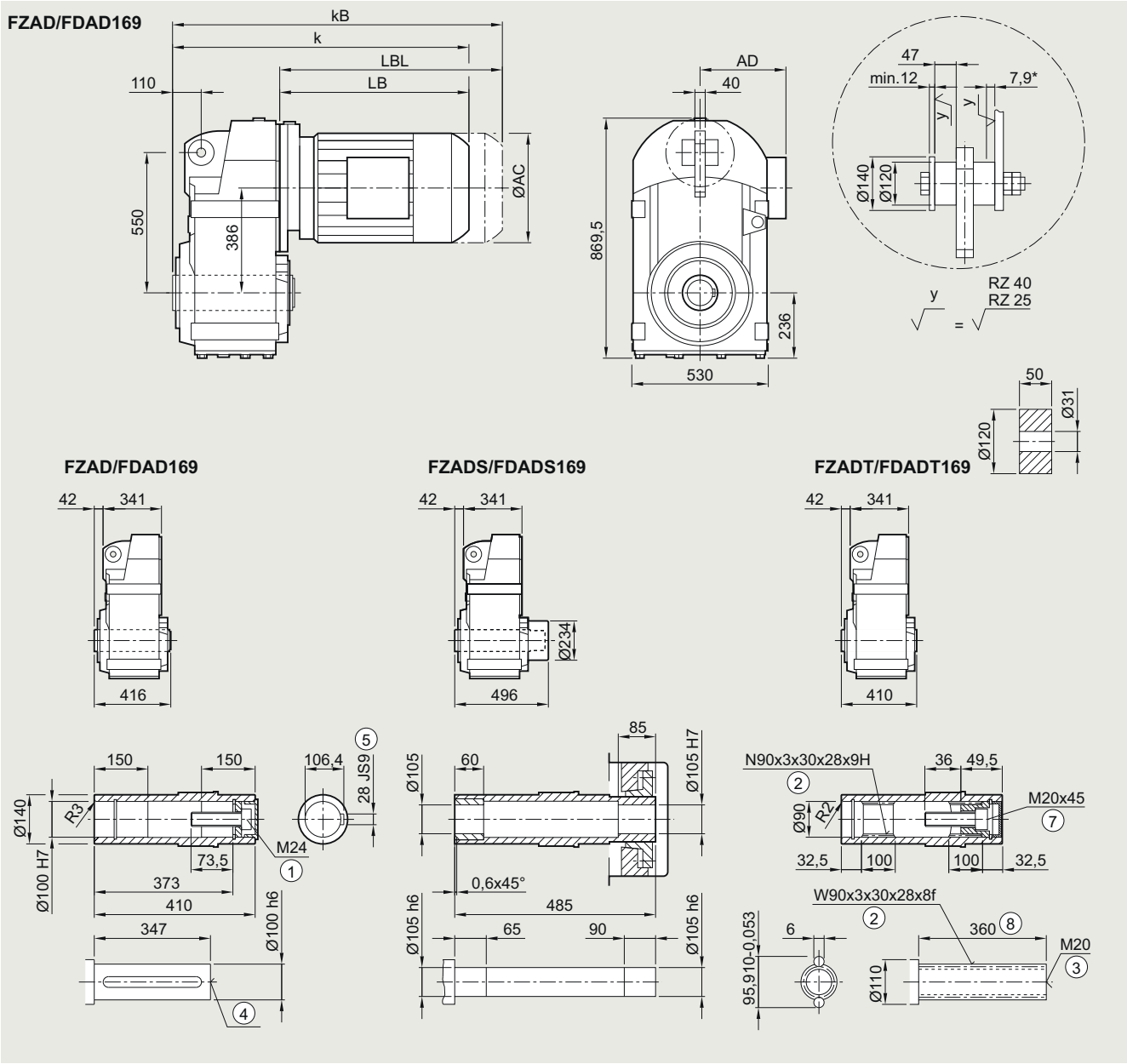

Motor	LE 112	112Z	132	132Z	160	160Z	LES 180	180Z	200	200Z	225	225Y	250
AC	222.0	222.0	264.0	264.0	318.0	318.0	352.5	352.5	392.5	392.5	439.0	439.0	487.0
AD[1)]	181.5	181.5	207.0	207.0	241.0	241.0	292.0	292.0	315.0	315.0	382.0	382.0	457.0
k	739.5	764.5	785.0	835.0	867.0	927.0	939.5	969.5	1007.5	1032.5	1052.5	1112.0	1159.5
kB	812.5	837.5	889.5	939.5	983.0	1043.0	1068.5	1098.5	1154.5	1179.5	1280.0	1340.0	1384.5
LB	353.5	378.5	399.0	449.0	481.0	541.0	553.5	583.0	621.5	646.5	666.0	726.0	773.5
LBL	426.5	451.5	503.5	553.5	597.0	657.0	682.5	712.5	768.5	793.5	894.0	954.0	998.5

① ISO 4014 ② DIN 5480 ③ DIN 332-D ④ DIN 332 ⑤ Feather key/keyway DIN 6885-1 ⑦ ISO 4762 ⑧ Without locating shoulder +1 mm

[1)] AD depends on the motor options, for other dimensions, see page 9/46. * Spring compression at max. torque

© Innomotics 2023

Gearbox FZ.Z./FD.Z.169 in a housing flange design

FZ030, FAZ030, FAZS030, FAZT030

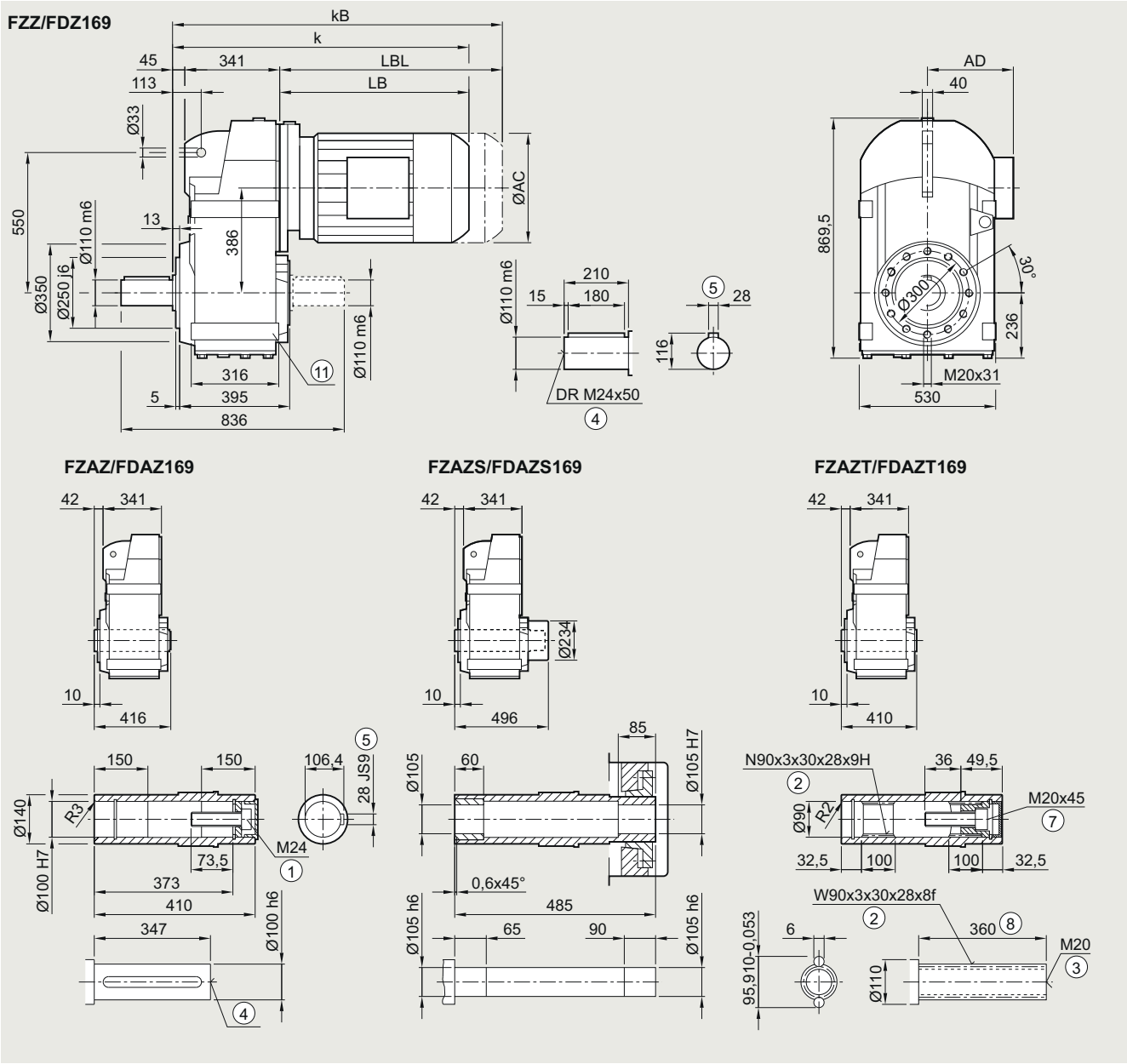

Motor	LE 112	112Z	132	132Z	160	160Z	LES 180	180Z	200	200Z	225	225Y	250
AC	222.0	222.0	264.0	264.0	318.0	318.0	352.5	352.5	392.5	392.5	439.0	439.0	487.0
AD[1)]	181.5	181.5	207.0	207.0	241.0	241.0	292.0	292.0	315.0	315.0	382.0	382.0	457.0
k	739.5	764.5	785.0	835.0	867.0	927.0	939.5	969.5	1007.5	1032.5	1052.5	1112.0	1159.5
kB	812.5	837.5	889.5	939.5	983.0	1043.0	1068.5	1098.5	1154.5	1179.5	1280.0	1340.0	1384.5
LB	353.5	378.5	399.0	449.0	481.0	541.0	553.5	583.0	621.5	646.5	666.0	726.0	773.5
LBL	426.5	451.5	503.5	553.5	597.0	657.0	682.5	712.5	768.5	793.5	894.0	954.0	998.5

① ISO 4014 ② DIN 5480 ③ DIN 332-D ④ DIN 332 ⑤ Feather key/keyway DIN 6885-1 ⑦ ISO 4762 ⑧ Without locating shoulder +1 mm
⑪ Use bores only for foot-mounted design
1) AD depends on the motor options, for other dimensions, see page 9/46.

© Innomotics 2023

Gearbox FZ.F./FD.F.169 in a flange-mounted design

FF030, FAF030, FAFS030, FAFT030

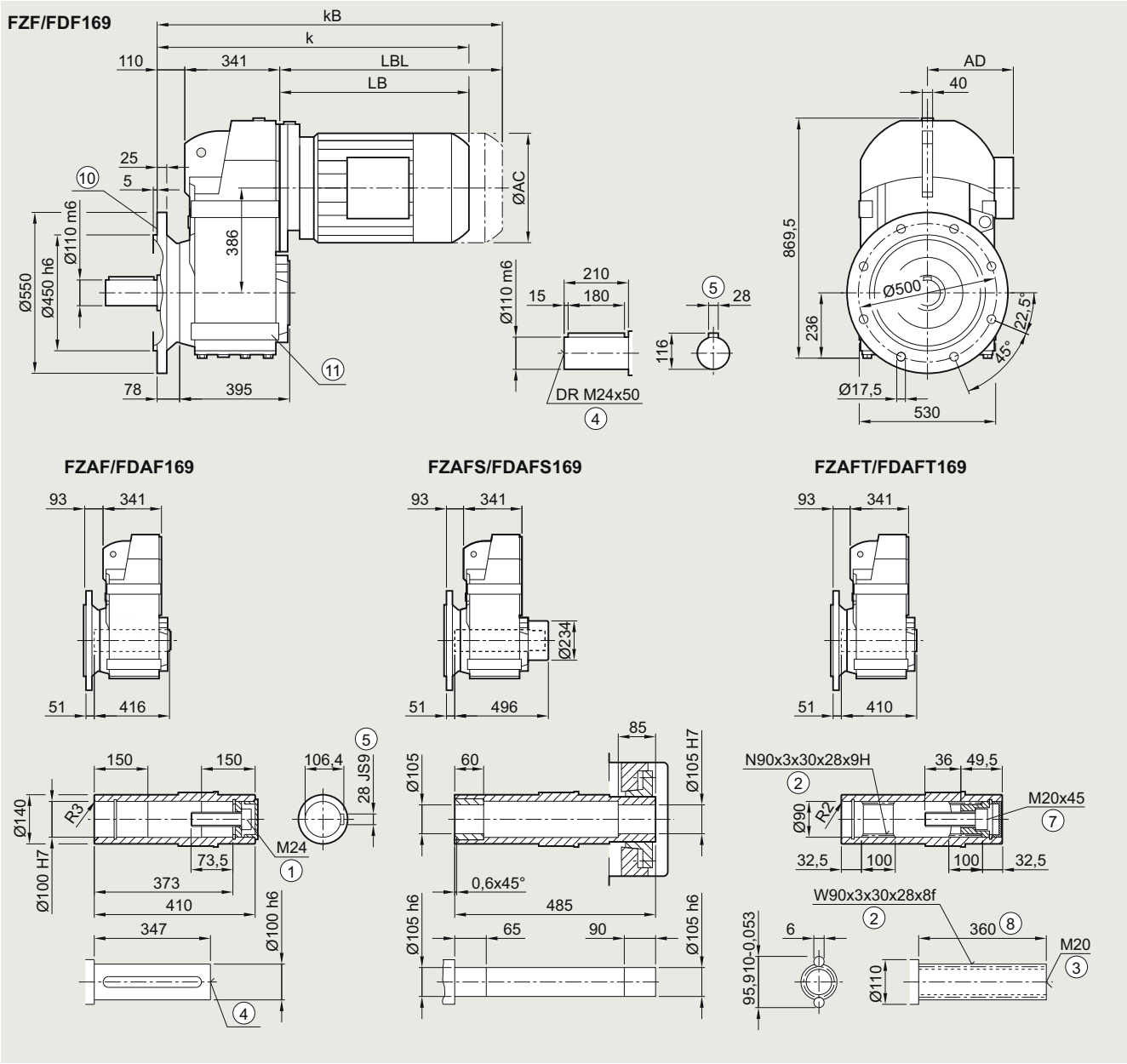

Motor	LE 112	112Z	132	132Z	160	160Z	LES 180	180Z	200	200Z	225	225Y	250
AC	222.0	222.0	264.0	264.0	318.0	318.0	352.5	352.5	392.5	392.5	439.0	439.0	487.0
AD[1)]	181.5	181.5	207.0	207.0	241.0	241.0	292.0	292.0	315.0	315.0	382.0	382.0	457.5
k	804.5	829.5	850.0	900.0	932.0	992.0	1004.5	1034.5	1072.5	1097.5	1117.0	1177.0	1224.5
kB	877.5	902.5	954.5	1004.5	1048.0	1108.0	1133.5	1163.5	1219.5	1244.5	1345.0	1405.0	1449.5
LB	353.5	378.5	399.0	449.0	481.0	541.0	553.5	583.5	621.5	646.5	666.0	726.0	773.5
LBL	426.5	451.5	503.5	553.5	597.0	657.0	682.5	712.5	768.5	793.5	894.0	954.0	998.5

① ISO 4014 ② DIN 5480 ③ DIN 332-D ④ DIN 332 ⑤ Feather key/keyway DIN 6885-1 ⑦ ISO 4762 ⑧ Without locating shoulder +1 mm
⑩ For inner contour, see page 4/124 ⑪ Use bores only for foot-mounted design
1) AD depends on the motor options, for other dimensions, see page 9/46.

© Innomotics 2023

Gearbox FZ.F./FD.F.169 in a flange-mounted design with VLplus reinforced bearing system (G30)

FF040, FAF040

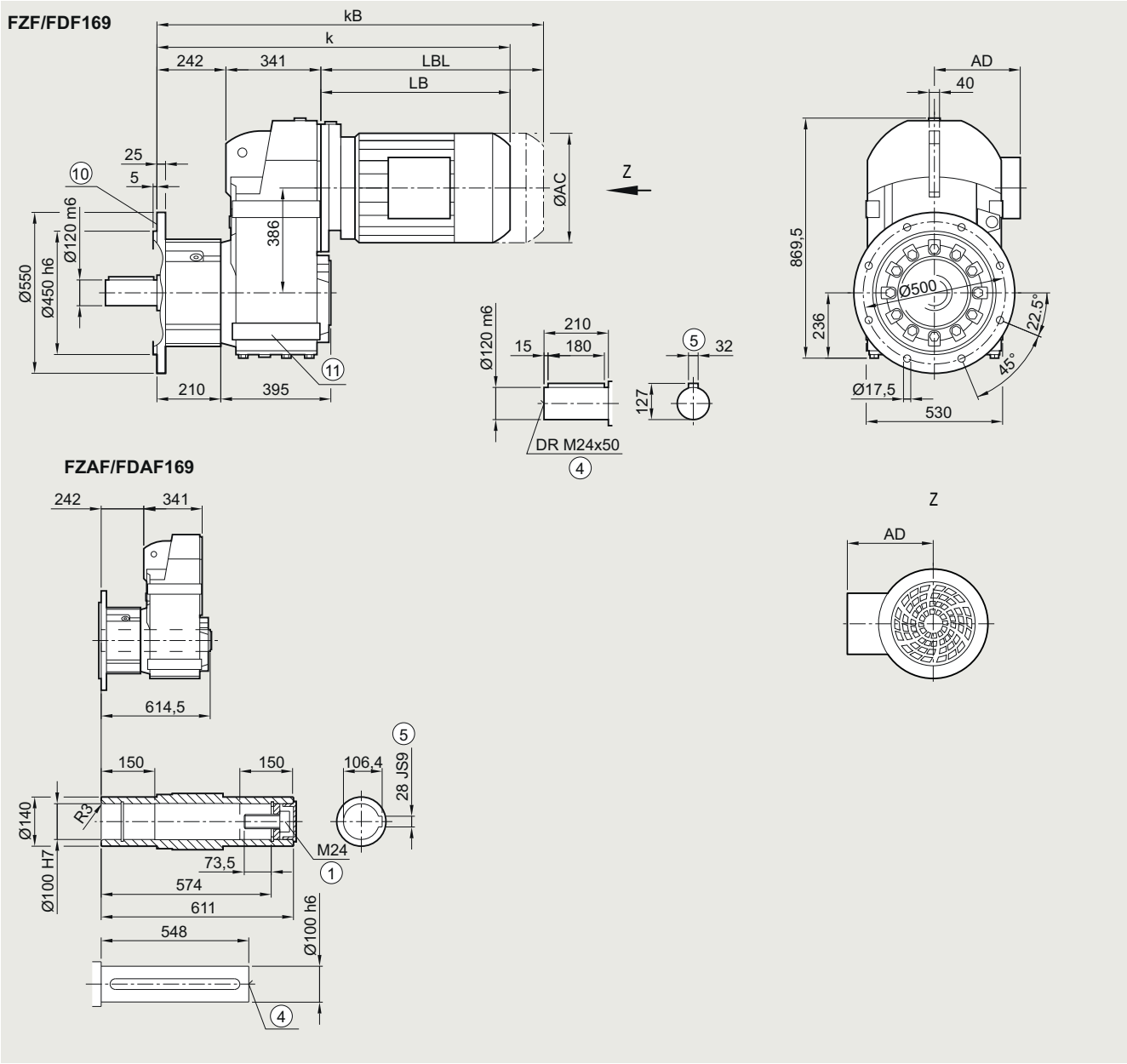

Motor	LE 112	112Z	132	132Z	160	160Z	LES 180	180Z	200	200Z	225	225Y	250
AC	222.0	222.0	264.0	264.0	318.0	318.0	352.5	352.5	392.5	392.5	439.0	439.0	487.0
AD[1)]	181.5	181.5	207.0	207.0	241.0	241.0	292.0	292.0	315.0	315.0	382.0	382.0	457.5
k	936.5	961.5	982.0	1032.0	1064.0	1124.0	1136.5	1166.5	1204.5	1129.5	1249.0	1309.0	1356.5
kB	1009.5	1034.5	1086.5	1136.5	1180.0	1240.0	1265.5	1295.5	1351.5	1376.5	1477.0	1537.0	1581.5
LB	353.5	378.5	399.0	449.0	481.0	541.0	553.5	583.5	621.5	646.5	666.0	726.0	773.5
LBL	426.5	451.5	503.5	553.5	597.0	657.0	682.5	712.5	768.5	793.5	894.0	954.0	998.5

① ISO 4014 ④ DIN 332 ⑤ Feather key/keyway DIN 6885-1 ⑪ Use bores only for foot-mounted design
⑩ For inner contour, see page 4/124
1) AD depends on the motor options, for other dimensions, see page 9/46.

© Innomotics 2023

4

Gearbox FZ../FD..169 in a foot-mounted design

F030, FA030, FAS030, FAT030

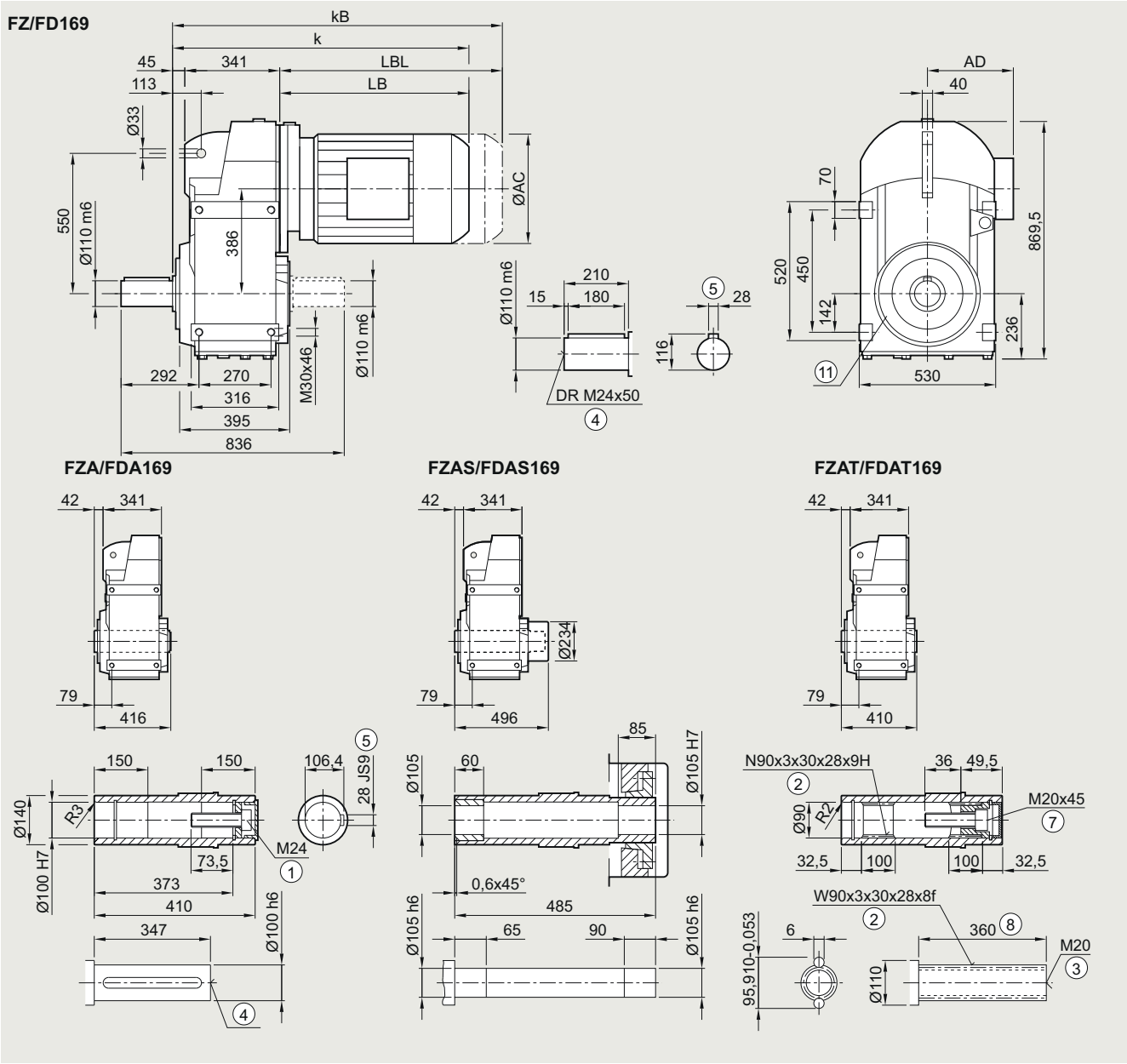

Motor	LE 112	112Z	132	132Z	160	160Z	LES 180	180Z	200	200Z	225	225Y	250
AC	222.0	222.0	264.0	264.0	318.0	318.0	352.5	352.5	392.5	392.5	439.0	439.0	487.0
AD[1)]	181.5	181.5	207.0	207.0	241.0	241.0	292.0	292.0	315.0	315.0	382.0	382.0	457.0
k	739.5	764.5	785.0	835.0	867.0	927.0	939.5	969.5	1007.5	1032.5	1052.5	1112.0	1159.5
kB	812.5	837.5	889.5	939.5	983.0	1043.0	1068.5	1098.5	1154.5	1179.5	1280.0	1340.0	1384.5
LB	353.5	378.5	399.0	449.0	481.0	541.0	553.5	583.0	621.5	646.5	666.0	726.0	773.5
LBL	426.5	451.5	503.5	553.5	597.0	657.0	682.5	712.5	768.5	793.5	894.0	954.0	998.5

① ISO 4014 ② DIN 5480 ③ DIN 332-D ④ DIN 332 ⑤ Feather key/keyway DIN 6885-1 ⑦ ISO 4762 ⑧ Without locating shoulder +1 mm
⑪ Use bores only for housing flange design
1) AD depends on the motor options, for other dimensions, see page 9/46.

© Innomotics 2023

Gearbox FZAD./FDAD.189 in a shaft-mounted design

FAD030, FADS030, FADT030

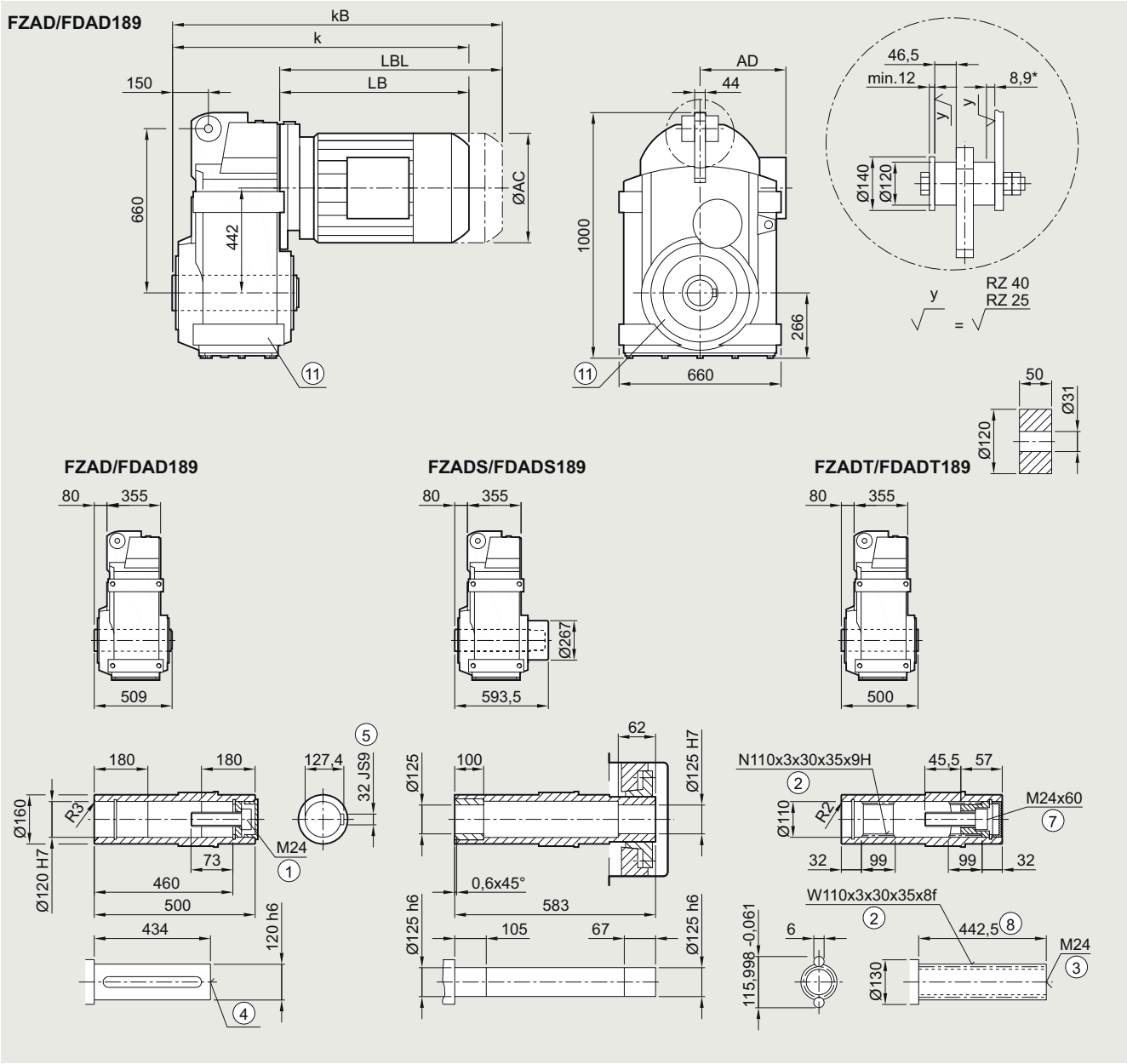

Motor	LE 112	112Z	132	132Z	160	160Z	LES 180	180Z	200	200Z	225	225Y	250
AC	222.0	222.0	264.0	264.0	318.0	318.0	352.5	352.5	392.5	392.5	439.0	439.0	487.0
AD[1)]	181.5	181.5	207.0	207.0	241.0	241.0	292.0	292.0	315.0	315.0	382.0	382.0	457.5
k	788.5	813.5	834.0	884.0	916.0	976.0	988.5	1018.5	1056.5	1081.5	1101.0	1161.0	1208.5
kB	861.5	886.5	938.5	988.5	1032.0	1092.0	1117.5	1147.5	1203.5	1228.5	1329.0	1389.0	1433.5
LB	353.5	378.5	399.0	449.0	481.0	541.0	553.5	583.5	621.5	646.5	666.0	726.0	773.5
LBL	426.5	451.5	503.5	553.5	597.0	657.0	682.5	712.5	768.5	793.5	894.0	954.0	998.5

① ISO 4014 ② DIN 5480 ③ DIN 332-D ④ DIN 332 ⑤ Feather key/keyway DIN 6885-1 ⑦ ISO 4762 ⑧ Without locating shoulder +1 mm
⑪ Use bores only for foot-mounted design
1) AD depends on the motor options, for other dimensions, see page 9/46. * Spring compression at max. torque

© Innomotics 2023

Gearbox FZ.Z./FD.Z.189 in a housing flange design

FZ030, FAZ030, FAZS030, FAZT030

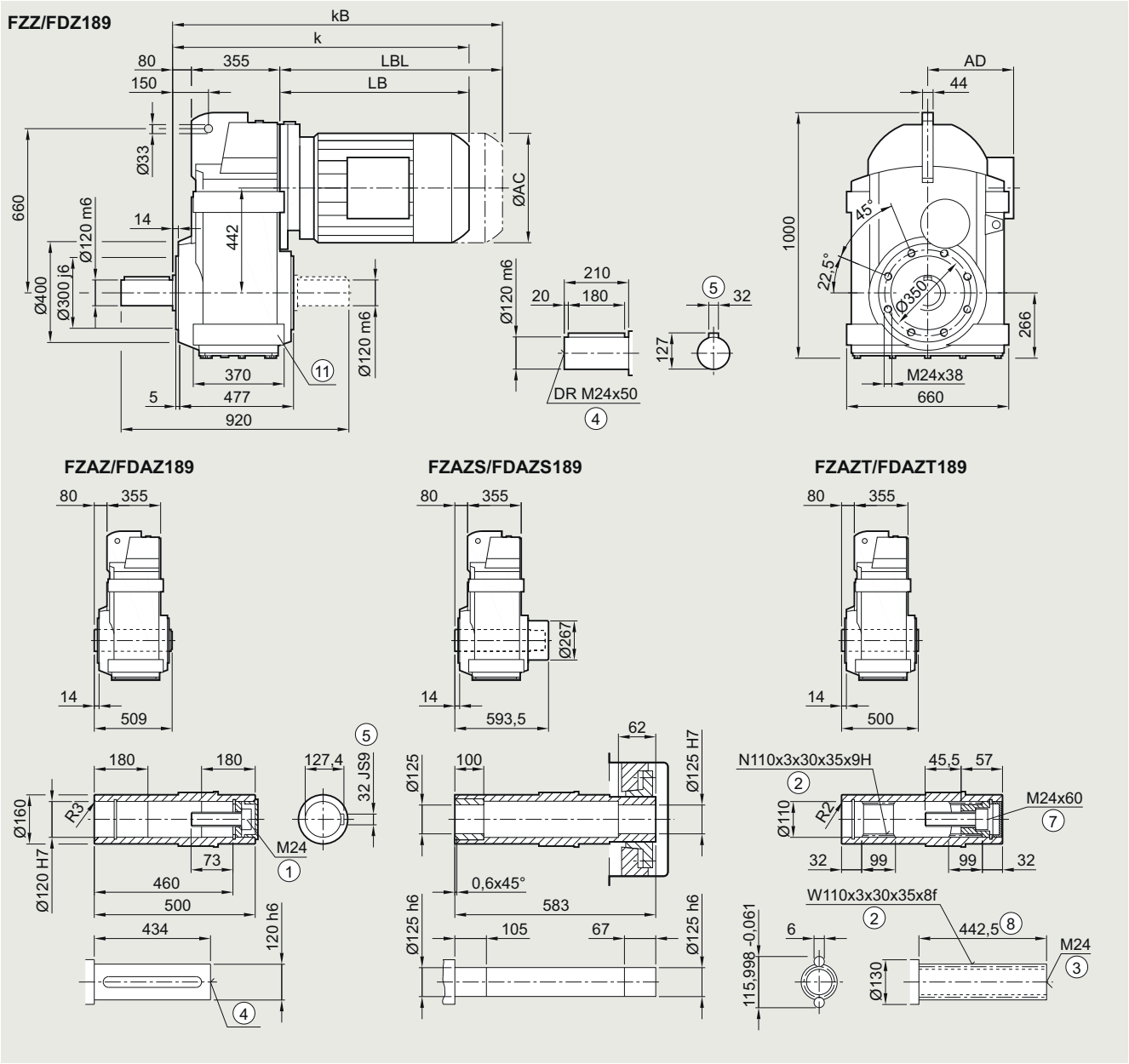

Motor	LE 112	112Z	132	132Z	160	160Z	LES 180	180Z	200	200Z	225	225Y	250
AC	222.0	222.0	264.0	264.0	318.0	318.0	352.5	352.5	392.5	392.5	439.0	439.0	487.0
AD[1)]	181.5	181.5	207.0	207.0	241.0	241.0	292.0	292.0	315.0	315.0	382.0	382.0	457.5
k	788.5	813.5	834.0	884.0	916.0	976.0	988.5	1018.5	1056.5	1081.5	1101.0	1161.0	1208.5
kB	861.5	886.5	938.5	988.5	1032.0	1092.0	1117.5	1147.5	1203.5	1228.5	1329.0	1389.0	1433.5
LB	353.5	378.5	399.0	449.0	481.0	541.0	553.5	583.5	621.5	646.5	666.0	726.0	773.5
LBL	426.5	451.5	503.5	553.5	597.0	657.0	682.5	712.5	768.5	793.5	894.0	954.0	998.5

① ISO 4014 ② DIN 5480 ③ DIN 332-D ④ DIN 332 ⑤ Feather key/keyway DIN 6885-1 ⑦ ISO 4762 ⑧ Without locating shoulder +1 mm
⑪ Use bores only for foot-mounted design
1) AD depends on the motor options, for other dimensions, see page 9/46.

© Innomotics 2023

Gearbox FZ.F./FD.F.189 in a flange-mounted design

FF030, FAF030, FAFS030, FAFT030

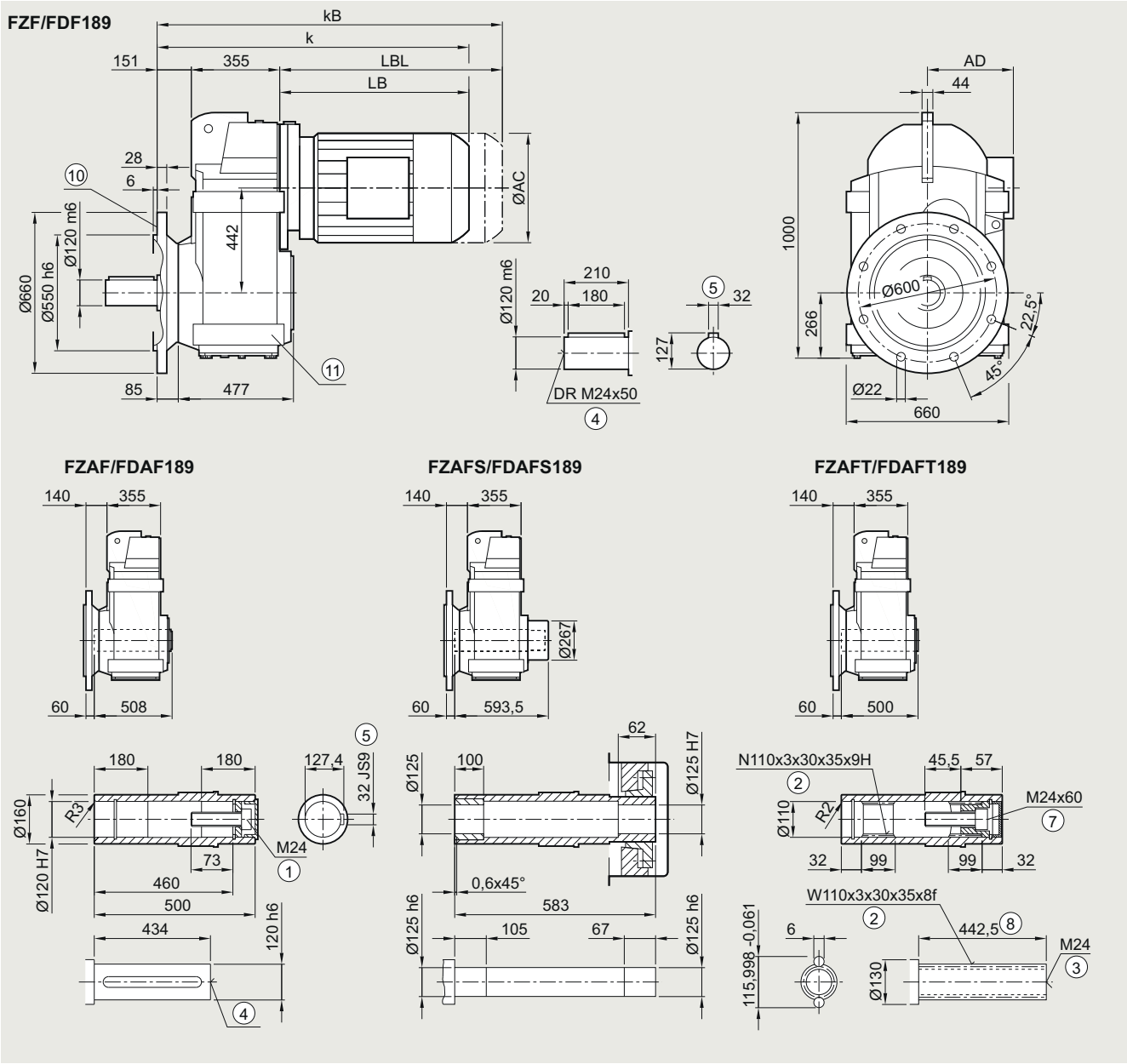

Motor	LE 112	112Z	132	132Z	160	160Z	LES 180	180Z	200	200Z	225	225Y	250
AC	222.0	222.0	264.0	264.0	318.0	318.0	352.5	352.5	392.5	392.5	439.0	439.0	487.0
AD[1)]	181.5	181.5	207.0	207.0	241.0	241.0	292.0	292.0	315.0	315.0	382.0	382.0	457.5
k	859.5	884.5	905.0	955.0	987.0	1047.0	1059.5	1089.5	1127.5	1152.5	1172.0	1232.0	1279.5
kB	932.5	957.5	1009.5	1059.5	1103.0	1163.0	1188.5	1218.5	1274.5	1299.5	1400.0	1460.0	1504.5
LB	353.5	378.5	399.0	449.0	481.0	541.0	553.5	583.5	621.5	646.5	666.0	726.0	773.5
LBL	426.5	451.5	503.5	553.5	597.0	657.0	682.5	712.5	768.5	793.5	894.0	954.0	998.5

① ISO 4014 ② DIN 5480 ③ DIN 332-D ④ DIN 332 ⑤ Feather key/keyway DIN 6885-1 ⑦ ISO 4762 ⑧ Without locating shoulder +1 mm
⑩ For inner contour, see page 4/124 ⑪ Use bores only for foot-mounted design

1) AD depends on the motor options, for other dimensions, see page 9/46.

© Innomotics 2023

4

Gearbox FZ../FD..189 in a foot-mounted design

F030, FA030, FAS030, FAT030

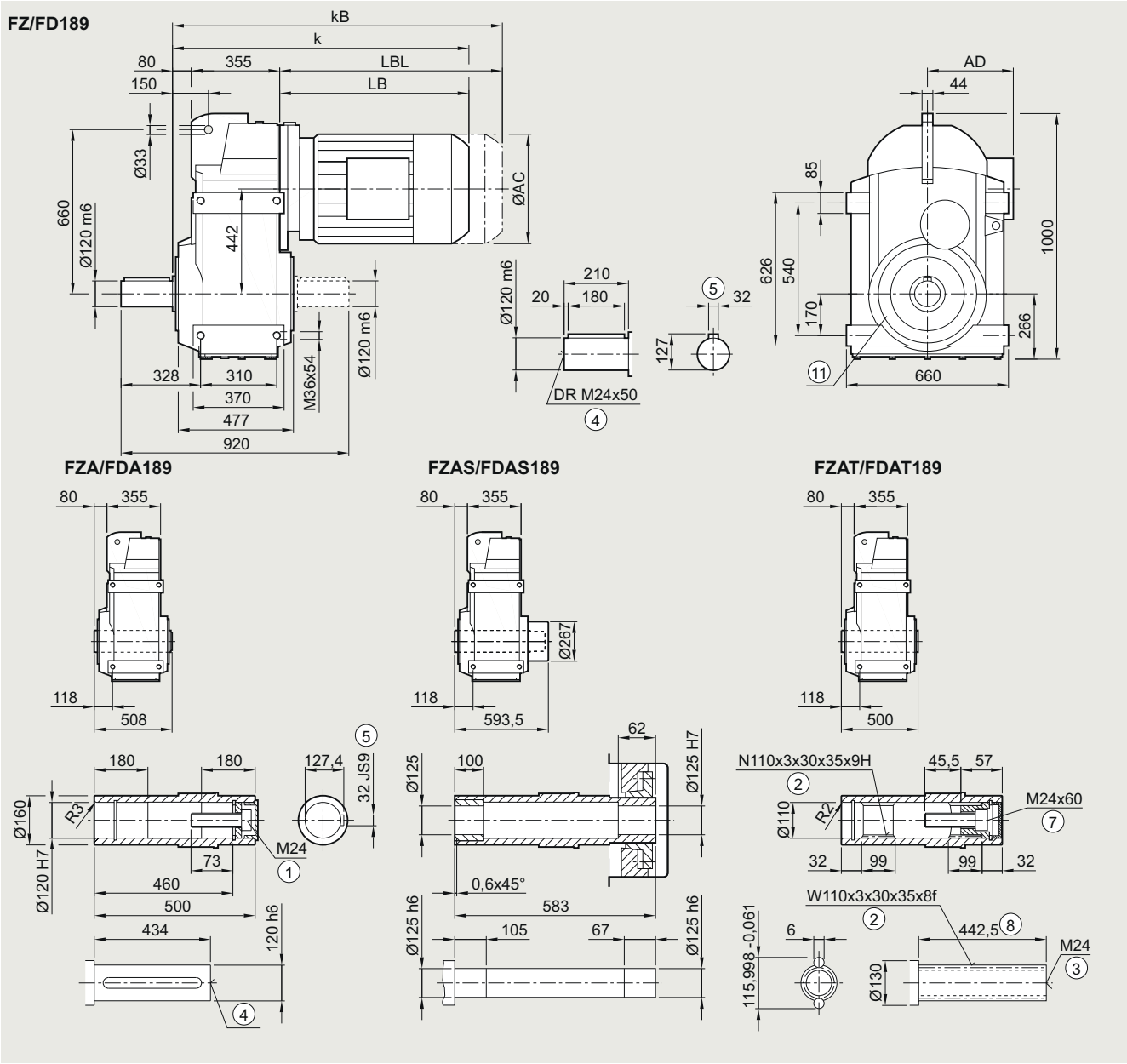

Motor	LE 112	112Z	132	132Z	160	160Z	LES 180	180Z	200	200Z	225	225Y	250
AC	222.0	222.0	264.0	264.0	318.0	318.0	352.5	352.5	392.5	392.5	439.0	439.0	487.0
AD[1)]	181.5	181.5	207.0	207.0	241.0	241.0	292.0	292.0	315.0	315.0	382.0	382.0	457.5
k	788.5	813.5	834.0	884.0	916.0	976.0	988.5	1018.5	1056.5	1081.5	1101.0	1161.0	1208.5
kB	861.5	886.5	938.5	988.5	1032.0	1092.0	1117.5	1147.5	1203.5	1228.5	1329.0	1389.0	1433.5
LB	353.5	378.5	399.0	449.0	481.0	541.0	553.5	583.5	621.5	646.5	666.0	726.0	773.5
LBL	426.5	451.5	503.5	553.5	597.0	657.0	682.5	712.5	768.5	793.5	894.0	954.0	998.5

① ISO 4014 ② DIN 5480 ③ DIN 332-D ④ DIN 332 ⑤ Feather key/keyway DIN 6885-1 ⑦ ISO 4762 ⑧ Without locating shoulder +1 mm
⑪ Use bores only for housing flange design
1) AD depends on the motor options, for other dimensions, see page 9/46.

© Innomotics 2023

Parallel shaft tandem geared motors

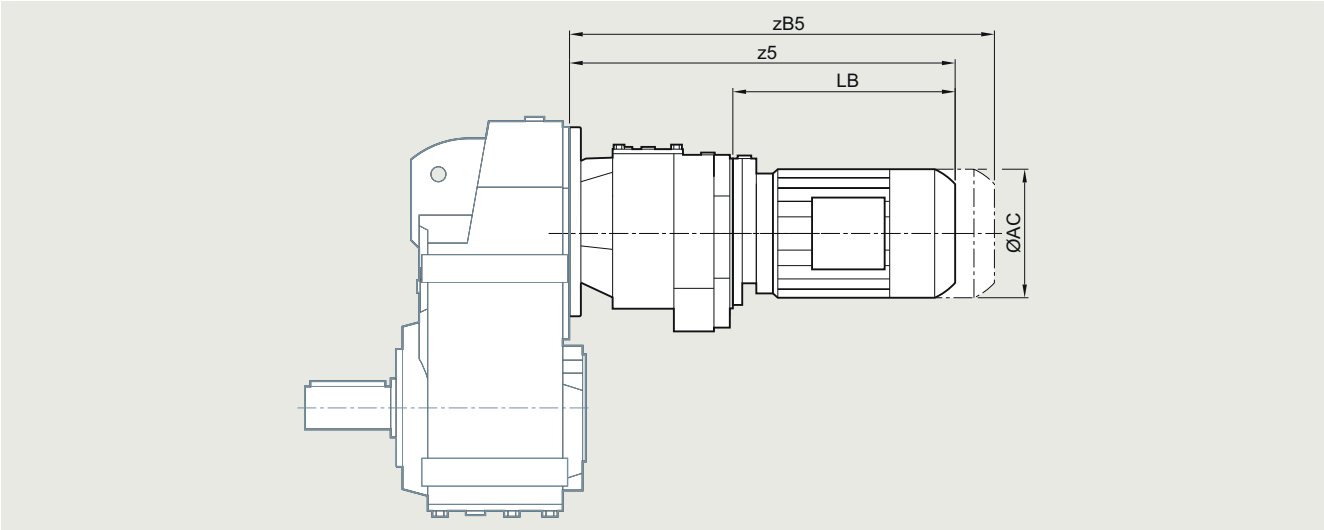

Gearbox	Motor	AC	z5	zB5	LB
FZ../FD..29-Z/D19	LE63	117.8	331.0	375.5	160.5
	LE63Z	117.8	357.0	401.5	186.5
FZ../FD..39-Z/D19	LE63	117.8	331.0	375.5	160.5
	LE63Z	117.8	357.0	401.5	186.5
	LES71	138.8	363.0	418.0	184.5
	LE71Z	138.8	382.0	437.0	203.5
	LE71Y	138.8	422.0	477.0	243.5
FZ../FD..49-Z/D19	LE63	117.8	322.0	366.5	160.5
	LE63Z	117.8	348.0	392.5	186.5
	LE71	138.8	354.0	409.0	184.5
	LE71Z	138.8	373.0	428.0	203.5
	LE71Y	138.8	413.0	468.0	243.5
	LE80	156.3	410.0	470.0	240.0
	LE80Z	156.3	445.0	505.0	275.0
FZ../FD..69-Z/D19	LE63	117.8	322.0	366.5	160.5
	LE63Z	117.8	348.0	392.5	186.5
	LE71	138.8	354.0	409.0	184.5
	LE71Z	138.8	373.0	428.0	203.5
	LE71Y	138.8	413.0	468.0	243.5
	LE80	156.3	410.0	470.0	240.0
	LE80Z	156.3	445.0	505.0	275.0
FZ../FD..79-Z/D39	LE63	117.8	373.5	418.0	194.0
	LE63Z	117.8	399.5	444.0	220.0
	LE71	138.8	405.5	460.5	226.0
	LE71Z	138.8	424.5	479.5	245.0
	LE71Y	138.8	464.5	519.5	285.0
	LE80	156.3	469.5	529.5	290.0
	LE80Z	156.3	504.5	564.5	325.0
FZ../FD..89-Z/D39	LE63	117.8	356.5	401.0	194.0
	LE63Z	117.8	382.5	427.0	220.0
	LE71	138.8	388.5	443.5	226.0
	LE71Z	138.8	407.5	462.5	245.0
	LE71Y	138.8	447.5	502.5	285.0
	LE80	156.3	452.5	512.5	290.0
	LE80Z	156.3	487.5	547.5	325.0
	LE90	173.8	514.0	584.0	351.5
	LE90Z	173.8	554.0	624.0	391.5

Gearbox	Motor	AC	z5	zB5	LB
FD..109-Z/D39	LE63	117.8	347.5	392.0	194.0
	LE63Z	117.8	373.5	418.0	220.0
	LE71	138.8	379.5	434.5	226.0
	LE71Z	138.8	398.5	453.5	245.0
	LE71Y	138.8	438.5	493.5	285.0
	LE80	156.3	443.5	503.5	290.0
	LE80Z	156.3	478.5	538.5	325.0
	LE90	173.8	505.0	575.0	351.5
	LE90Z	173.8	545.0	615.0	391.5
	LE100	198.0	561.5	640.0	408.0
	LE100Z	198.0	596.5	675.0	443.0
FD..129-Z/D49	LE63	117.8	376.5	421.0	184.5
	LE63Z	117.8	402.5	447.0	210.5
	LE71	138.8	408.5	463.5	216.5
	LE71Z	138.8	427.5	482.5	235.5
	LE71Y	138.8	467.5	522.5	275.5
	LE80	156.3	472.5	532.5	280.5
	LE80Z	156.3	507.5	567.5	315.5
	LE90	173.8	534.0	604.0	342.0
	LE90Z	173.8	574.0	644.0	382.0
	LE100	198.0	590.5	669.0	398.5
	LE100Z	198.0	625.5	704.0	433.5
	LE112	222.0	600.5	673.5	408.5
	LE112Z	222.0	635.0	708.0	443.0

© Innomotics 2023

Parallel shaft tandem geared motors

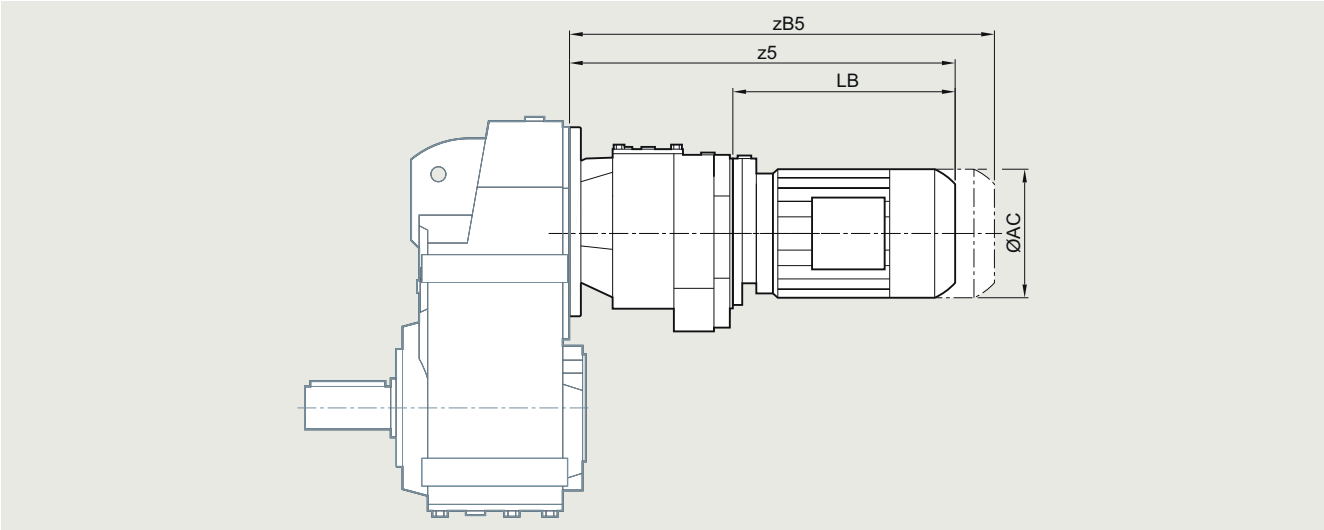

Gearbox	Motor	AC	z5	zB5	LB
FD..149-Z/D49	LE63	117.8	366.0	410.5	184.5
	LE63Z	117.8	392.0	436.5	210.5
	LE71	138.8	398.0	453.0	216.5
	LE71Z	138.8	417.0	472.0	235.5
	LE71Y	138.8	457.0	512.0	275.5
	LE80	156.3	462.0	522.0	280.5
	LE80Z	156.3	497.0	557.0	315.5
	LE90	173.8	523.5	593.5	342.0
	LE90Z	173.8	563.5	633.5	382.0
	LE100	198.0	580.0	658.5	398.5
	LE100Z	198.0	615.0	693.5	433.5
	LE112	222.0	590.0	663.0	408.5
	LE112Z	222.0	624.5	697.5	443.0
	LE132	264.0	643.0	747.5	461.5
	LE132Z	264.0	693.0	797.5	511.5
FD..169-Z/D69	LE63	117.8	391.5	436.0	184.5
	LE63Z	117.8	417.5	462.0	210.5
	LE71	138.8	423.5	478.5	216.5
	LE71Z	138.8	442.5	497.5	235.5
	LE71Y	138.8	482.5	537.5	275.5
	LE80	156.3	487.5	547.5	280.5
	LE80Z	156.3	522.5	582.5	315.5
	LE90	173.8	549.0	619.0	342.0
	LE90Z	173.8	589.0	659.0	382.0
	LE100	198.0	605.5	684.0	398.5
	LE100Z	198.0	640.5	719.0	433.5
	LE112	222.0	615.5	688.5	408.5
	LE112Z	222.0	650.0	723.0	443.0
	LE132	264.0	668.5	773.0	461.5
	LE132Z	264.0	718.5	823.0	511.5

Gearbox	Motor	AC	z5	zB5	LB
FD..189-Z/D69	LE63	117.8	391.5	436.0	184.5
	LE63Z	117.8	417.5	462.0	210.5
	LE71	138.8	423.5	478.5	216.5
	LE71Z	138.8	442.5	497.5	235.5
	LE71Y	138.8	482.5	537.5	275.5
	LE80	156.3	487.5	547.5	280.5
	LE80Z	156.3	522.5	582.5	315.5
	LE90	173.8	549.0	619.0	342.0
	LE90Z	173.8	589.0	659.0	382.0
	LE100	198.0	605.5	684.0	398.5
	LE100Z	198.0	640.5	719.0	433.5
	LE112	222.0	615.5	688.5	408.5
	LE112Z	222.0	650.0	723.0	443.0
	LE132	264.0	668.5	773.0	461.5
	LE132Z	264.0	718.5	823.0	511.5

© Innomotics 2023

SIMOLOC assembly system

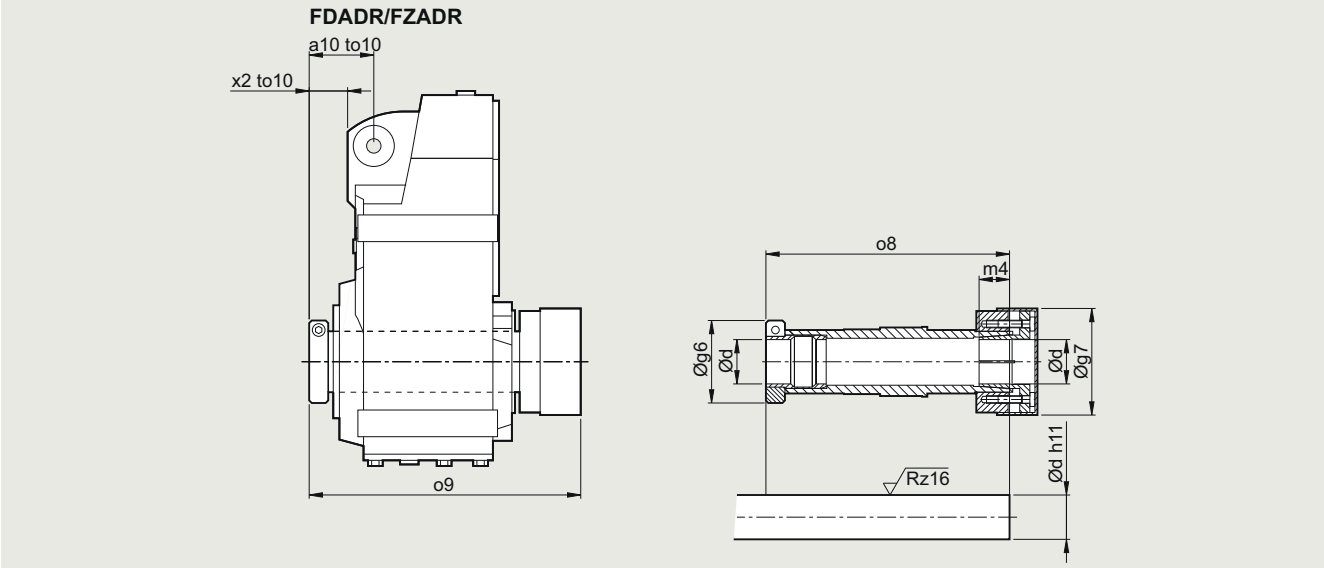

Note mounting tolerance to10 when positioning the torque arm.

d	g6	g7	m4	o8	o9	a10	to10	x2
FZADR/FDADR29								
25	58.5	56	18.5	140.5	161	40.0	+2.1	23.5
20							+0.6	
1“								
0.75“								
FZADR/FDADR39								
30	62.0	76	22	160.5	181	46.5	+2.2	29.5
25							+0.7	
1.25“								
1.1875“								
1“								
FZADR/FDADR49								
35	65.0	84	24	192.0	214	47.0	+2.6	24.5
30							+0.8	
1.375“								
1.4375“								
1.25“								
1.1875“								
FZADR/FDADR69								
40	79.5	94	30	217.5	240	59.5	+2.5	37.0
35							+0.7	
1.5“								
1.625“								
1.4375“								
1.375“								
FZADR/FDADR79								
40	79.5	94	30	232.0	259	60.0	+3.2	34.0
35							+1.4	
1.5“								
1.625“								
1.4375“								
1.375“								
FZADR/FDADR89								
50	89.0	114	32	264.0	295	69.0	+3.4	32.0
40							+1.5	
2“								
1.9375“								
1.75“								
1.625“								

© Innomotics 2023

Protective covers

Protective cover for hollow shaft

F.A, F.AF, F.AZ, F.AD

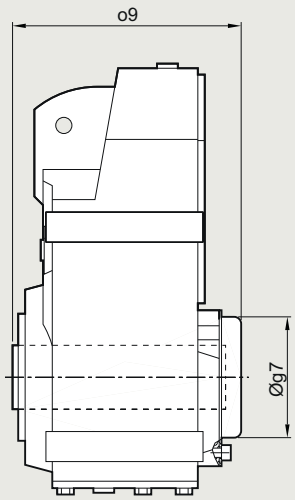

Gearbox type	F.A..29	F.A..39	F.A..49	F.A..69	F.A..79	F.A..89	F.A..109	F.A..129	F.A..149	F.A..169	F.A..189
Protective cover											
g7	67.0	82.5	80.0	99.0	99.0	137.0	187.0	187.0	218.0	257.5	309.5
o9	120.5	134.0	177.0	179.0	192.5	232.5	281.5	348.0	425.0	520.0	623.5

Protective cover for hollow shaft with shrink disk

F.AS, F.AFS, F.AZS, F.ADS

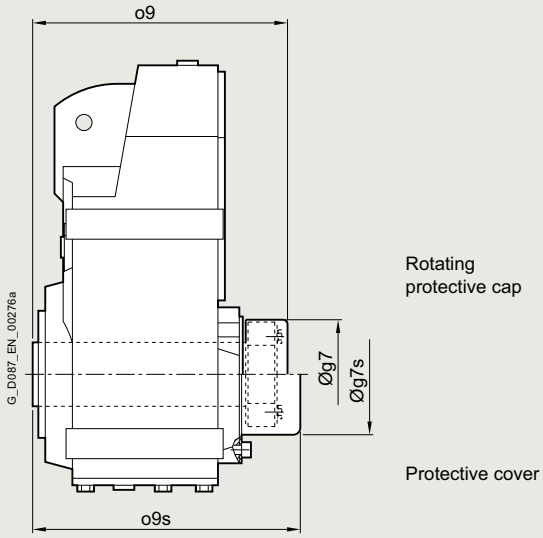

Gearbox type	F.A..29	F.A..39	F.A..49	F.A..69	F.A..79	F.A..89	F.A..109	F.A..129	F.A..149	F.A..169	F.A..189
Rotating protective cap with shrink disk version											
Max. motor frame size that can be mounted	80	90	100	100	132	160	200	225	250	250	250
g7	57.0	76.0	84.0	84.0	94.0	119.0	145.0	159.0	201.0	234.0	267.0
o9	132.5	149.5	182.0	198.0	215.5	247.5	282.5	348.5	408.5	496.0	593.5
Protective cover											
Max. motor frame size that can be mounted	80	80	100	100	112	132	200	225	250	250	250
g7s	58.0	82.5	86.0	99.0	99.0	137.0	187.0	187.0	218.0	257.5	309.5
o9s	135.5	170.0	198.0	210.0	223.5	284.5	308.5	375.0	425.0	520.0	623.5

© Innomotics 2023

Protective covers

Protective cover for hollow shaft with SIMOLOC assembly system

F.ADR

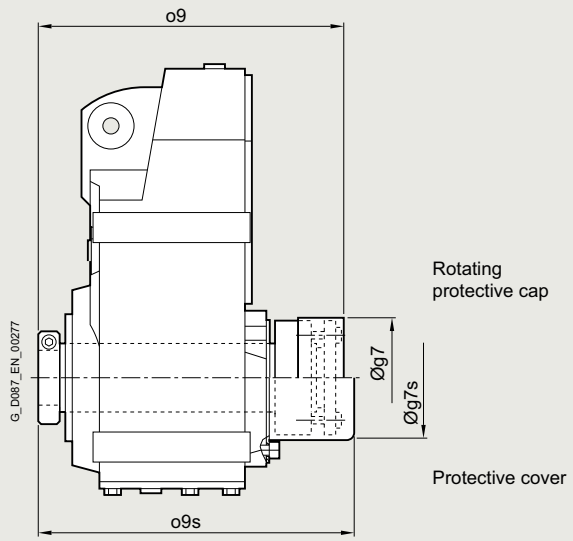

Gearbox type	F.ADR29	F.ADR39	F.ADR49	F.ADR69	F.ADR79	F.ADR89
Rotating protective cap						
Max. motor frame size that can be mounted	80	90	100	100	132	160
g7	56.0	76.0	84.0	94.0	94.0	114.0
o9	161.0	181.0	214.0	240.0	259.0	295.0
Protective cover						
Max. motor frame size that can be mounted	80	80	100	100	112	132
g7s	58.0	82.5	86.0	99.0	99.0	137.0
o9s	164.0	184.0	219.0	249.5	263.5	303.5

© Innomotics 2023

Inner contour of the flange-mounted design

Notes regarding the design of the customer's interface for the solid shaft design

FZF/FDF

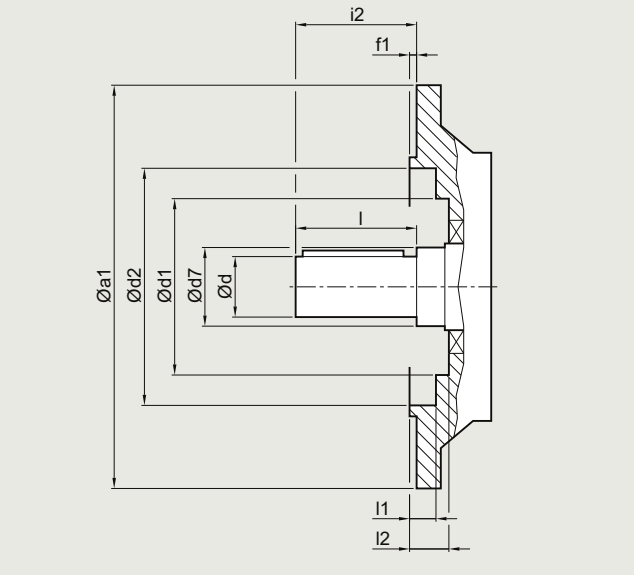

Gearbox type	a1	d	d7	d1	d2	f1	i2	l	l1	l2
FZF/FDF29	120	25	40	–	70	3.0	40	40	24.0	–
	160	25	40	70	101	3.5	40	40	8.5	24.5
FZF/FDF39	160	25	30	–	100	3.5	50	50	5.0	–
		35	45	80	102	3.5	46	70	2.0	29.5
FZF/FDF49	200	30	35	–	118	3.5	60	60	5.5	–
		40	50	90	120	3.5	55	80	4.0	30.5
FZF/FDF69	250	35	45	–	165	4.0	70	70	6.5	–
FZF/FDF79	250	40	55	–	165	4.0	80	80	6.5	–
		50	55	104	165	4.0	77	100	2.0	29.5
FZF/FDF89	300	50	55	–	165	4.0	100	100	8.0	–
FZF/FDF109	350	60	65	–	235	5.0	120	120	9.0	–
		80	85	184	210	5.0	134	170	13.0	45.0
FZF/FDF129	450	70	75	–	336	5.0	140	140	9.0	–
		90	95	184	336	5.0	128.5	170	16.5	48.5
FZF/FDF149	450	90	100	–	336	5.0	170	170	10.0	–
		100	120	214	330	5.0	169	210	10.5	50.0
FZF/FDF169	550	110	120	–	427	5.0	210	210	10.0	–
		120	140	254	426	5.0	162	210	14.5	56.0
FZF/FDF189	660	120	160	–	517	6.0	210	210	11.0	–
		140	160	306	518	6.0	190	250	6.0	62.0
With VLplus reinforced bearing system (G30)										
FZF/FDF89	300	60	70	143	218	4.0	120	120	1.5	8
FZF/FDF109	350	70	85	190	234	5.0	140	140	2.0	4
FZF/FDF129	450	90	95	–	336	5.0	170	170	16.5	–
FZF/FDF149	450	100	120	225	336	5.0	210	210	10.5	11
FZF/FDF169	550	120	140	–	426	5.0	210	210	19.5	–

Notes regarding the design of the customer's interface for the hollow shaft design

FDAF /FZAF

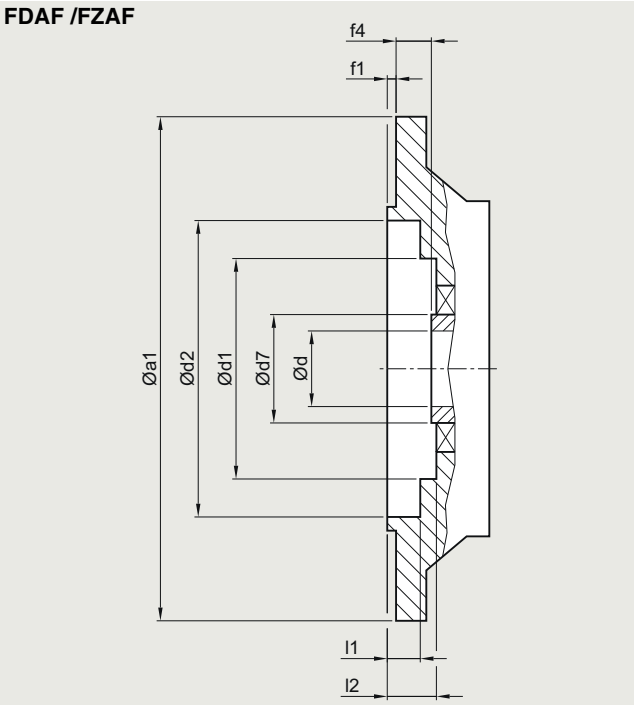

Gearbox type	a1	d	d7	d1	d2	f1	f4	l1	l2
FDAF /FZAF 29	120	25	40	–	70	3.0	20.0	24.0	–
	160	25	40	70	101	3.5	20.0	8.5	24.5
FDAF /FZAF 39	160	25	45	80	102	3.5	24.0	2.0	29.5
		30							
FDAF /FZAF 49	200	30	50	90	120	3.5	25.0	4.0	30.5
		35							
FDAF /FZAF 69	250	40	55	104	165	4.0	23.5	2.0	29.5
FDAF /FZAF 79	250	40	55	104	165	4.0	23.0	2.0	29.5
FDAF /FZAF 89	300	50	70	135	215	4.0	37.0	2.0	44.5
FDAF /FZAF 109	350	60	85	184	210	5.0	36.0	13.0	45.0
		70	90						
FDAF /FZAF 129	450	70	95	184	336	5.0	41.5	16.5	48.5
FDAF /FZAF 149	450	80	120	214	330	5.0	41.0	10.5	50.0
		90							
FDAF /FZAF 169	550	100	140	254	426	5.0	56.0	14.5	56.0
		110							
FDAF /FZAF 189	660	120	160	306	518	6.0	66.0	6.0	62.0
With VLplus reinforced bearing system (G30)									
FDAF /FZAF 89	300	50	70	143	218	4.0	0	1.5	8
FDAF /FZAF 109	350	60	85	190	234	5.0	0	2.0	4
FDAF /FZAF 129	450	70	95	–	336	5.0	0	16.5	–
FDAF /FZAF 149	450	90	120	225	330	5.0	0	10.5	11
FDAF /FZAF 169	550	100	140	–	426	5.0	0	14.5	–